删除[Mayday Mayday]: 900

Contents

Chapter 1 Safety Information and Precautions ..... - 3 -

1.1 Safety Information ..... - 3 -

1.2 General Precautions ..... - 4 -

Chapter 2 Product Information ..... - 6 -

2.1 Products Nameplate ..... - 6 -

2.2 Products Model Number ..... - 6 -

2.3 Products Dimensions ..... - 9 -

2.4 Technical Specifications ..... - 10 -

2.5 Brake Chopper & Brake Resistor List ..... - 11 -

Chapter 3 Mechanical Installation and Electrical Installation ..... - 12 -

3.1 Mechanical Installation ..... - 12 -

3.1.1 Installation Environment Requirements ..... - 12 -

3.1.2 Installation Clearance Requirements ..... - 12 -

3.1.3 Routine Maintenance ..... - 13 -

3.2 Electrical Installation ..... - 13 -

3.2.1 Inverter Main Loop Terminal ..... - 13 -

3.2.2 Caution of Power Terminal Wiring ..... - 13 -

3.2.3 Description of Control Terminals ..... - 14 -

3.2.4 Terminal Wiring Diagram ..... - 17 -

Chapter 4 Keypad and Display Operation ..... - 19 -

4.1 General Type Operation Panel ..... - 19 -

4.2 General Type Keyboard Function Description ..... - 19 -

4.3 Mini Type Operation Panel (0.75-2.2KW) ..... - 20 -

4.4 Mini Type Keyboard Function Description (0.75-2.2KW) ..... - 20 -

4.2 General Type Panel Operation ..... - 21 -

4.6 Cases Study ..... - 22 -

4.6.1 Inverter Three-wire Setting ..... - 22 -

4.6.2 Multi-speed settings (mini type) ..... - 23 -

4.6.3 Application of Inverter Constant Pressure Water Supply Function ..... - 24 -

4.6.4 Application of Multi-inverter Network Function (Taking three inverters as an example) ..... - 25 -

4.6.5 Application of one inverter controls multiple pumps ..... - 26 -

Chapter 5 Parameters ..... - 28 -

5.1 Parameters Overview ..... - 29 -

删除[Mayday Mayday]: 900

5.2.1 F0 Parameter Group – Basic Parameters ..... - 34 -
5.2.2 F1 Parameter Group – Terminal IO Function Selection ..... - 38 -
5.2.3 F2 Parameter Group - VF Curve ..... - 43 -
5.2.4 F3 Parameter Group – Start/Stop Process Control ..... - 45 -
5.2.5 F4 Parameter Group – Multi-segment Command ..... - 48 -
5.2.6 F5 Parameter Group – PID & Constant Pressure Water Supply Parameters ..... - 50 -
5.2.7 F6 Parameter Group – Extend Parameter ..... - 54 -
5.2.8 F7 Parameter Group – Communication Parameters ..... - 57 -
5.2.9 F8 Parameter Group – Motor Control Mode ..... - 59 -
5.2.10 F9 Parameter Group – Motor Control Advanced Parameter ..... - 61 -

5.2 Monitoring Parameter ..... - 65 -

Chapter 6 Communication ..... - 68 -

6.1 Modbus-RTU Communication Protocol ..... - 68 -

6.2 Modbus Register Definition ..... - 69 -

6.3 Modbus Application Cases ..... - 70 -
6.3.1 Setting Communication Parameters ..... - 70 -
6.3.2 Enable Communication Function ..... - 70 -

Chapter7 Maintenance and Troubleshooting ..... - 71 -

7.1 Routine Maintenance ..... - 71 -
7.1.1 Regular Inspection ..... - 71 -
7.1.2 Long-time Storage ..... - 71 -

7.2 Faults and Solutions ..... - 71 -

7.3 Common Faults and Solutions ..... - 76 -

7.4 Warranty Agreement ..... - 77 -

Warranty Card ..... - 78 -

删除[Mayday Mayday]: 900

Chapter 1 Safety Information and Precautions

1.1 Safety Information

Please read this chapter carefully while installing and commissioning the inverter and be sure to follow the safety precautions required in this chapter. We will assume no liability or responsibility for any injury or loss caused by improper operation.

In this manual, safety precautions are classified into the following two categories：

Danger — Indicates there is a risk of electric shock, which may cause equipment damage or personal injury if not avoided.

Warning — Indicates potential risks, which could result in equipment damage or property loss if not avoided

Danger	★Do not install the equipment if you find water seepage, component missing or damage upon unpacking！
	★Do not use the strip to supply power to the inverter.
	★Do not conduct any high voltage insulation and withstand voltage test.
	★Before touching the inverter, disconnect the power supply; After power off, terminal and internal will exist high pressure for ten minutes, during when don't touch any input/output terminals.
	★Rotating motor may feed electrical energy back to the inverter, before touching it, please ensure that the motor has stopped, or disconnected with the inverter.
	★Before connecting the cable, make sure there is no voltage at the power terminal.
	★Ground the inverter as standard. The ground wire must be able to withstand the maximum fault current limited by the fuse or circuit breaker.
注意	▲ Handle the equipment with care during transportation.
	▲ Keep away from combustibles and electrical conductors.
	▲ Inverters are best used indoors, IP20 inverters must be installed in a level 2 pollution environment or in the cabinet of the IP54 and higher level of protection.
	▲ Ensure adequate heat dissipation while installing the inverter and do not drill holes near it, for drilling dust and metal debris could fall into the inverter, which may lead to danger.
	▲ Do not drop wire end or screw into the inverter.
	▲ Never connect the power cables to the output terminals (U, V, W) of the inverter.
	▲ Never connect the braking resistor between the DC bus terminals DC+ and DC-.
	▲ Do not install any automatic control device between the inverter and the motor.
	▲ When the control cable is near the power line, keep a minimum spacing of 100 mm and arrange a 90-degree crossover. Make sure all the terminals have been fastened using the appropriate torque.
	▲ If the enable input signal is valid, the driven motor may start directly after being powered on.
	▲ Ensure that the supply voltage, frequency and phase are in accordance with the inverter rating.
	▲ When motor autotune, pay attention that the motor may rotate, which may cause danger.
	▲ The inverter can control the motor to run above or below the rated speed. When needing the motor to run overrated speed, you can confirm whether it is feasible with motor manufacturers.

删除[Mayday Mayday]: 900

	▲ Do not power on or off the inverter frequently, which may be easy to shorten its service life. Please power on again ten minutes after power off.
	▲ In the area with an altitude of more than 1000m, derating is required.
	▲ Do not try to repair the inverter when errors and faults occur. Contact us for more help.

1.2 General Precautions

1. Requirement on Residual Current Device (RCD)

The inverter generates high leakage current during running, which flows through the protective earthing (PE) conductor. Thus install a type-B RCD at primary side of the power supply. When selecting the RCD, you should consider the transient and steady-state leakage current to ground that may be generated at startup and during running of the inverter. You can select a specialized RCD with the function of suppressing high harmonics or a general-purpose RCD with relatively large residual current.

2. Motor Insulation Test

Perform the insulation test when the motor is used for the first time, or when it is reused after being stored for a long time, or in a regular check-up, in order to prevent the poor insulation of motor windings from damaging the inverter. The motor must be disconnected from the inverter during the insulation test. A 500V mega-Ohm meter is recommended for the test. The insulation resistance must not be less than 5 MΩ.

3. Thermal Protection of Motor

If the rated capacity of the motor selected does not match that of the inverter, especially when the inverter's rated power is greater than the motor's, adjust the motor protection parameters on the operation panel of the Inverter or install a thermal relay in the motor circuit for protection.

4. Running at Over 50 Hz

The inverter provides frequency output of 0 to 500 Hz. If the inverter is required to run at over 50 Hz, consider the capacity of the mechanical devices.

5. Vibration of Mechanical Device

The inverter may encounter the mechanical resonance point at some output frequencies, which can be avoided by setting the skip frequency.

6.Motor Heat and Noise

The output of the inverter is pulse width modulation (PWM) wave with certain harmonic frequencies, and therefore, the motor temperature, noise, and vibration are slightly greater than those when the inverter runs at grid power (50 Hz).

7.Varistor or capacitor on output side of the Inverter

Do not install the capacitor for improving power factor or lightning protection voltage-sensitive resistor on the output side of the inverter because the output of the inverter is PWM wave. Otherwise, the inverter may suffer transient over-current or even be damaged.

8.Contactor at the I/O Terminal of the Inverter

When a contactor is installed between the input side of the inverter and the power supply, the inverter must not be started or stopped by switching the contactor on or off. If the inverter has to be operated by the contactor, ensure that the time interval between switching is at least one hour since frequent charge and discharge will shorten the service life of the capacitor inside the inverter.

When a contactor is installed between the output side of the inverter and the motor, do not turn off the contactor when the inverter is active. Otherwise, modules inside the inverter may be damaged.

9.When External Voltage is Out of Rated Voltage Range

The inverter must not be used outside the allowable voltage range specified in this manual. Otherwise,

删除[Mayday Mayday]: 900

the inverter's components may be damaged. If required, use a corresponding voltage step-up or step-down device.

10.Prohibition of Three-phase Input Changed into Two-phase Input

Do not change the three-phase input of the inverter into two-phase input. Otherwise, a fault will result in, or the inverter will be damaged.

11.Lightning Shock Protection

The inverter has a built-in lightning overcurrent protection device, it has certain self-protection ability for inductive lightning. But user should also install lightning protection device at the front end of the inverters in frequent lightning area.

12.Temperature and De-rating

The regular using temperature of this inverter is -10℃- +40℃. De-rating using is required when temperature is more than 40℃. De-rating by 1.5% for every degree increase in ambient temperature. The highest ambient temperature is 50℃.

13.Altitude and De-rating

In places where the altitude is above 1000m and the cooling effect reduces due to thin air, it is necessary to de-rate the inverter. When the altitude is above 1000m, de-rating by 1% for 100m increase in altitude. The highest altitude is 3000m.

14.Some Special Usage

If the user needs to use a method other than the recommended wiring diagram in this manual, such as shared DC bus, please consult us.

15.Scrap

The electrolytic capacitors on the main circuits and PCB may explode when they are burnt. Poisonous gas is generated when the plastic parts are burnt. Please treat them as industrial waste.

16.About Adaptable Motor

• The default setting of this inverter is for the 4-pole cage asynchronous induction motors. For other types of motors, select proper parameters in the inverter.

• The cooling fan and rotor shaft of non-variable-frequency motor are coaxial, which results in reduced cooling effect when the rotational speed declines. If variable speed is required, add a more powerful fan or replace it with variable-frequency motor in applications where the motor overheats easily.

• The standard parameters of the adaptable motor have been configured inside the inverter. It is still necessary to perform motor auto-tuning or modify the default values based on actual conditions. Otherwise, the running result and protection performance will be affected.

• The inverter may alarm or even be damaged when short-circuit exists on cables or inside the motor. Therefore, perform insulation short-circuit test when the motor and cables are newly installed or during routine maintenance. During the test, make sure that the inverter is disconnected from the tested parts.

Chapter 2 Product Information

Our inverters have been tested and inspected before leaving our factory. Before unpacking the product, please check product packaging for shipping damage caused by careless transportation and whether the specifications and type of the product complies with the order. If there is any question, please contact the supplier of the products, or directly contact us.

2.1 Products Nameplate

RV900 series inverters are named following rules below:

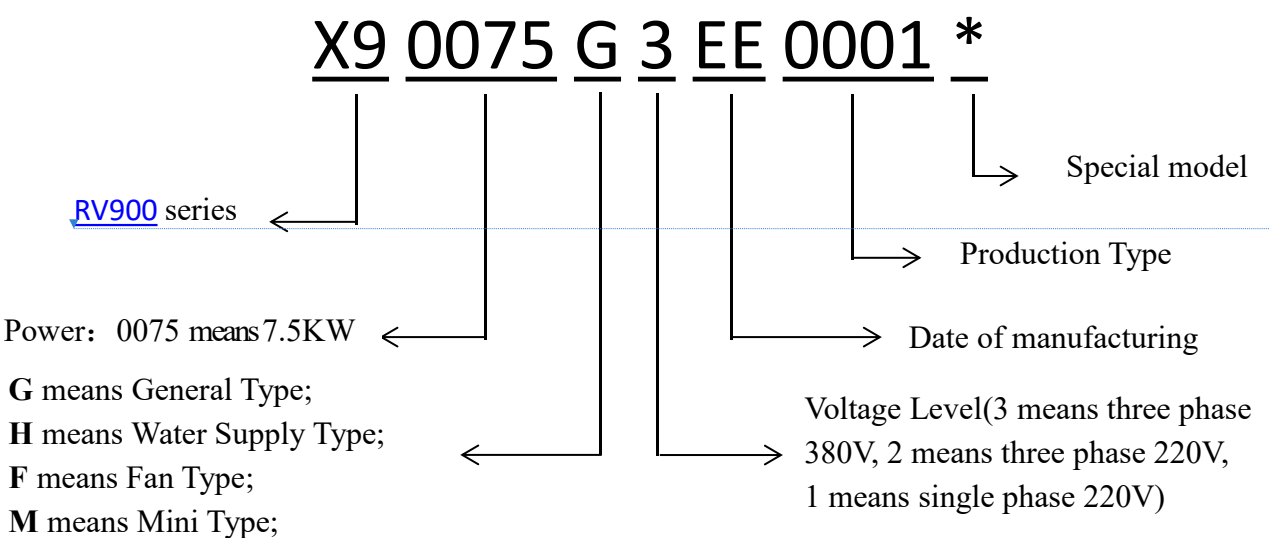

2.2 Products Model Number

RV900M，Single Phase Input：200~240V±10%，Three Phase Input：380~480V±10%，50/60Hz				
Inverter Model	Adapted motor		Rated output current(A)	Frame
	KW	HP		
RV900-0007M1	0.75	1	4	A00M
RV900-0015M1	1.5	2	7	A00M
RV900-0007M3	0.75	1	2.5	A00M
RV900-0015M3	1.5	2	3.7	A00M
RV900-0022M3	2.2	3	5.1	A00M
Single Phase Input：200~240V±10%，50/60Hz				
Inverter Model	Adapted motor		Rated output current(A)	Frame
	KW	HP		
RV900-0007G1	0.75	1	4	A00
RV900-0015G1	1.5	2	7	A00
RV900-0022G1	2.2	3	10	A01

RV900-0040G1	4.0	5	18	A01
Three Phase Input: 200~240V±10%, 50/60Hz				
Inverter Model	**Adapted motor**		**Rated output current(A)**	**Frame**
	KW	**HP**		
RV900-0040G2	4	5	18.1	A02
RV900-0055G2	5.5	7.5	28	A03
RV900-0075G2	7.5	10	37.1	A03
RV900-0110G2	11	15	49.8	A04
RV900-0150G2	15	20	65.4	A05
RV900-0185G2	18.5	25	81.6	A05
RV900-0220G2	22	30	97.7	A06
RV900-0300G2	30	40	122.1	A07
RV900-0370G2	37	50	157	A07
RV900-0450G2	45	60	185	A07
RV900-0550G2	55	70	215	A08
RV900-0750G2	75	100	320	A09
Three Phase Input： 380~480V±10%， 50/60Hz				
Inverter Model	**Adapted motor**		**Rated output Current(A)**	**Frame**
	KW	**HP**		
RV900-0007G3	0.75	1	2.5	A00
RV900-0015G3	1.5	2	3.7	A00
RV900-0022G3	2.2	3	5.1	A00
RV900-0040G3	4	5	8.5	A01
RV900-0055G3	5.5	7.5	13	A01
RV900-0075G3	7.5	10	16	A02
RV900-0110G3	11	15	25	A02
RV900-0150G3	15	20	32	A03
RV900-0185G3	18.5	25	38	A03
RV900-0220G3	22	30	45	A04
RV900-0300G3	30	40	60	A04
RV900-0370G3	37	50	75	A05
RV900-0450G3	45	60	90	A05
RV900-0550G3	55	70	110	A06
RV900-0750G3	75	100	150	A07
RV900-0930G3	93	125	170	A07
RV900-1100G3	110	150	210	A08
RV900-1320G3	132	175	250	A08
RV900-1600G3	160	210	300	A09

删除[Mayday Mayday]: 900

RV900-1850G3	185	245	340	A09
RV900-2000G3	200	260	380	A09
RV900-2200G3	220	300	415	A09
RV900-2500G3	250	350	470	A10
RV900-2800G3	280	370	520	A10
RV900-3150G3	315	400	600	A10
RV900-3550G3	355	420	650	A11
RV900-4000G3	400	530	725	A11
RV900-4500G3	450	595	820	A11
RV900-5000G3	500	595	980	A11
RV900-5600G3	560	740	1080	A12
RV900-6300G3	630	830	1200	A12

删除[Mayday Mayday]: 900
删除[Mayday Mayday]: 900
删除[Mayday Mayday]: 900
删除[Mayday Mayday]: 900
删除[Mayday Mayday]: 900
删除[Mayday Mayday]: 900
删除[Mayday Mayday]: 900
删除[Mayday Mayday]: 900
删除[Mayday Mayday]: 900
删除[Mayday Mayday]: 900
删除[Mayday Mayday]: 900
删除[Mayday Mayday]: 900
删除[Mayday Mayday]: 900

删除[Mayday Mayday]: 900

2.3 Products Dimensions

No.	Power	Dimension(mm)			Installation Size(mm)		Hole ϕ
		W	D	H	W1	H1	
A00M	0.75~1.5KW/220V 0.75~2.2KW/380V	153	86	123	143	76	4.5mm
A00	0.75~2.2KW/220V 0.75~2.2KW/380V	170	86	141	157	75	5mm
A01	4.0~5.5KW/380V 4.0/220V	188	96	171	176	83.6	5mm
A02	7.5~11KW	228	114	192	214.5	98.7	5mm
A03	15~18.5KW	290	160	182	269	143	6.5mm
A04	22~37KW	328	193	217	305	172	8.5mm
A05	45~55KW *	344	228	223	324	206	8.5mm
A06	45~55KW	490	327.5	238	459	202.5	10mm
A07	75~93KW	526	300	304	504	200	9mm
A08	110~132KW	690	370	360	636.5	232	10mm
A09	160~220KW	720	410	360	690	330	10mm
A10	250~315KW	1060	650	392.5	1030	420	12mm
A11	355~500KW	1361.5	818	404.5	1280	520	16mm
A12	560~630KW	1330	786	410	1295	500	16mm

*Due to Product upgrade, size update without prior notice, Consult staff for details.

删除[Mayday Mayday]: 900

2.4 Technical Specifications

Item		Specifications
Basic Functions	Maximum Frequency	Vector Control：0~599.9Hz V/F Control：0~599.9Hz
	Carrier Frequency	0.5kHz~16kHz; the carrier frequency will be automatically adjusted according to the load characteristics.
	Input Frequency Resolution	Digital Setting： 0.1Hz Analog Setting： 0.01V corresponding maximum frequency ×0.1%
	Control Mode	Open Loop Vector Control(SVC), V/F Control
	Startup Torque	0.5Hz/150%(SVC)
Basic Functions	Speed Range and Precision	1：100(SVC)；±0.5%(SVC)
	Overload Capability	150% rated current 60s,180% rated current 3s
	Torque Boost	0.1%~30.0%
	V/F Curve	Line Type、Square Type
	Acc. / dec Curve	Straight line or S curve acceleration and deceleration mode Acceleration and deceleration time range between 0.0 to 500.0s.
	DC Brake	DC Brake Frequency：0.00Hz to maximum frequency. Brake time： 0.0s to 36.0s
	Multi-speed Running	It can realize at maximum of 8 segments speed running via the control terminal.
	Built-in PID	It is easy to realize process-controlled closed loop control system.
	Over-voltage/current Stall Control	It can limit the running voltage/current automatically and prevent frequent over-voltage/current tripping during the running process.
	Motor Over-temperature Protection	Acceptable motor temperature sensor input (PT100, PT1000)
	Timing Control	Timing control function：set time range 0.0~6500.0Min
	Bus Support	Support Site Bus：Modbus
	Protection Function	It can implement power-on motor short-circuit detection, output phase loss protection, over current protection, over voltage protection, under voltage protection, overheating protection and overload protection, which can be turned on or shielded as required.

删除[Mayday Mayday]: 900

Item		Specifications
Running	Running Command Source	Operation panel reference, control terminal reference, and communication reference
	Target Frequency Source	Digital reference, analog signal reference, multi-segment speed reference, PI control reference, and communication reference
	Control Signal Input Terminal	5 digital input； 2 analog input，support 0~10V、4~20mA、0~20mA、20~0mA、20~4mA and 10~0V signal
	Control Signal Output Terminal	1 relay output, 2 digital output. 2 analog output， support 0~10V、4~20mA、0~20mA、20~0mA、20~4mA and 10~0V 0~20mA signal
Environment	Using Place	Indoor, and be free from direct sunlight, dust, corrosive gas, combustible gas, oil smoke, vapor, drip or salt.
	Altitude	0~4000m； Derating use when more than 1000m (decrease by 1% per 100 meters)
	Ambient Temperature	-10 ℃ to +40 ℃ (Derating use when under ambient temperature of 40 ℃ to 50 ℃)
	Humidity	Less than 95%RH, without condensing
	Vibration	Less than 5.9m/s (0.6g)
	Storge Temperature	－20℃~＋60℃
	IP Level	IP20
	Pollution Level	PD2
	Power Distribution System	TN, TT

2.5 Brake Chopper & Brake Resistor List

Voltage(V)	Inverter Power(KW)	Brake Chopper Specification		Voltage(V)
		W	Ω	
Single Phase 220V	0.75	80	150	Single Phase 220V
	1.5	100	100	
	2.2	100	70	
Three Phase 380V	0.75	150	300	Three Phase 380V
	1.5	150	220	
	2.2	250	200	
	4.0	300	130	
	5.5	400	90	
	7.5	500	65	

Note: models above 5.5KW need external brake unit. Contact the supplier for more information.

删除[Mayday Mayday]: 900

Chapter 3 Mechanical Installation and Electrical Installation

3.1 Mechanical Installation

3.1.1 Installation Environment Requirements

1) The inverter should be installed vertically and fixed on the mounting support or smooth plane with screws.
2) Ensure that the installation environment meets the environmental requirements in Section 2.5.
3) Keep away from combustibles and areas where water may drench and have enough space around it for heat dissipation.

3.1.2 Installation Clearance Requirements

The clearance that needs to be reserved varies with the power class of the inverter, as shown in the following figure:

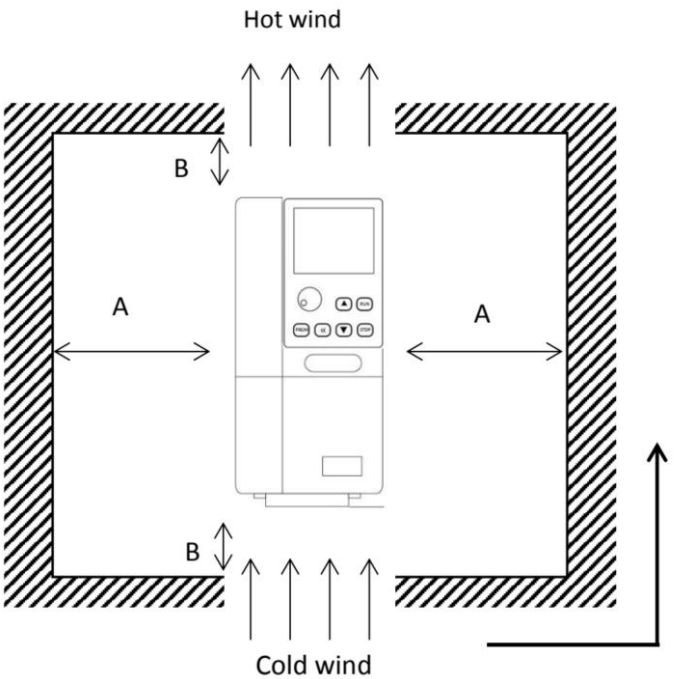

Figure. 3.1.2.1

Installation clearance requirements on the inverters of different power classes：

Power Class	Clearance Requirements(mm)	
0.75kW~22kW	A≥10	B≥200
30kW~37kW	A≥50	B≥200
45kW~110kW	A≥50	B≥300

Heat dissipation of inverter is distributed from bottom to top. When multiple inverters work, they are usually installed side by side. In the case of upper and lower row installation, the heat of lower row inverter will cause the temperature rise of upper row equipment and lead to failure, so measures such as installation of heat insulation guide plate should be taken.

删除[Mayday Mayday]: 900

3.1.3 Routine Maintenance

（1） Environmental temperature must be kept within the limits set out in Section 2.5.

（2） The radiator fan must rotate easily and be free from dust.

（3） The cabinet in which the inverter is installed should be free of dust and condensation, and the ventilation fan and air filter should work properly to ensure adequate airflow.

3.2 Electrical Installation

3.2.1 Inverter Main Loop Terminal

Mark	Terminal Name	Function Description
R、S、T	Three Phase Power Input Terminal	AC input three-phase power connection point, for single phase inverter, connect R、S terminal.
U、V、W	Inverter Output Terminal	Connect three phase motors.
P(+)、PB(-)	External Brake Terminal	External Brake Resistor
⏚	Earth Terminal PE	Earth Terminal

3.2.2 Caution of Power Terminal Wiring

1)Input Power R、S、T：

- Inverter input side connection, no phase sequence requirements.
- The specifications and installation methods of the external power wiring should comply with the local regulations and related IEC standards.
- Please refer to the following table for power cable wiring：

Inverter Model		Recommended Breaker Specifications	Recommended Contactor Specification	Recommended Input Power Cable (㎡)	Recommended Motor Cable(㎡)	Recommended Control Cable(㎡)
Single Phase 220V	0.75KW	16	10	2.5	2.5	1.5
	1.5KW	20	16	4	2.5	1.5
	2.2KW	32	20	6	4	1.5
Three Phase 380V	0.75KW	10	10	2.5	2.5	1.5
	1.5KW	16	10	2.5	2.5	1.5
	2.2KW	16	10	2.5	2.5	1.5
	4KW	25	16	4	4	1.5
	5.5KW	32	25	6	6	1.5
	7.5KW	40	32	6	6	1.5

Caution of terminal wiring:

1. Inverter input side:

▲ Three-phase power supply should be connected to R, S, T terminal, do not have to consider the phase sequence; Single-phase power supply (220V model) should be connected to the R and S terminal.

删除[Mayday Mayday]: 900

▲ Proper protection devices installed on input and distribution lines should comply with local safety regulations.

▲ Protection can be provided by installing a suitable fuse at the power supply entry line. Fuses used must comply with local regulations.

▲ Residual high voltage exists at terminals of DC bus DC+ and DC- after power off. Therefore, power off for 10 minutes before wiring.

2. Inverter output side:

▲ Capacitor or surge absorber cannot be connected to the output side of the inverter, Otherwise, inverter protection or even damage will be caused.

▲ The selection of brake resistance should refer to the recommended value, and the wiring distance should be less than 5m.

▲ When the length of motor cable is more than 100m, AC output reactor should be installed near the inverter.

▲ In order to reduce the interference of inverter output to other equipment, it is recommended to use shielded cable for motor cable.

▲ Motor terminal box connection: Most general-purpose motors can operate at dual voltages, as indicated on the motor nameplate. The operating voltage of the motor is usually selected when the motor is installed, star connection or angle connection. The star connection is usually the one with the highest voltage rating.

Motor Input Voltage	Motor Nameplate Voltage	Motor Wiring Mode	
230 VAC	230/400 VAC	Delta	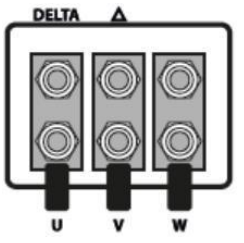
400 VAC	400/690 VAC		
400 VAC	230/400 VAC	Star	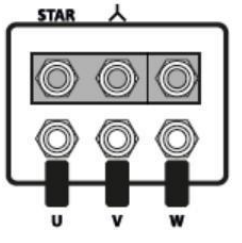

3.2.3 Description of Control Terminals

Description of Control Terminals of mini type inverter:

TA	TB	DC	AI	DI1	DI2	DI3	DI4	GND	AO	S+	S-

*S+ S- is for external expansion, not standard;

Description of Control Terminals of general type inverter:

NC	NC1	DI1	DI2	DI3	DI4	DI5	S-	S+	AI1	AO1

TA	TB	TC	DO1	COM	DO2	24V	AO2	GND	AI2	10V

删除[Mayday Mayday]: 900

*NC NC1 is a non-standard function and needs to be produced according to the order requirements.

Control Terminals Description:

删除[Mayday Mayday]: 900

Type	Terminal	Terminal Name	Function Description
Power Output	+10V-GND	Terminal of 10V power output	Provide +10V power supply for external units, with maximum output current of 10mA. It is generally used as the operating power supply for the external potentiometer. The potentiometer resistance range is 1-5kΩ.
Analog Input	AI1-GND	Analog input terminal 1	F0-07 set voltage and current mode.
	AI2-GND	Analog input terminal 2	F0-07 set voltage and current mode.
Digital Input	DI1-COM	Digital Input 1	1. Optical coupling isolation， bipolar input.
	DI2-COM	Digital Input 2	
	DI3-COM	Digital Input 3	
	DI4-COM	Digital Input 4	
	DI5-COM	Digital Input 5	
Analog Output	AO1-GND	Analog output	F0-07 set voltage and current mode.
	AO2-GND	Analog output	F0-07 set voltage and current mode.
Digital Output	DO1-COM	Digital output	Optical coupling isolation, dual polarity open collector output. Output voltage range：0-24V.
	DO2-COM	Digital output	Optical coupling isolation, dual polarity open collector output. Output voltage range：0-24V.
Relay Output	T/B-T/C	Normally closed	Contact driving capacity：250Vac，3A; 30Vdc, 1A
	T/A-T/B	Normally open	
485 Communication Interface	S+/S-	485 communication interface	Respectively are the positive end of 485 differential signal and the negative end of 485 differential signal (reference ground: GND). Standard 485 communication interface, please use twisted pair or shielded cable.

删除[Mayday Mayday]: 900

3.2.4 Terminal Wiring Diagram

Mini type three-phase 380V terminal wiring diagram:

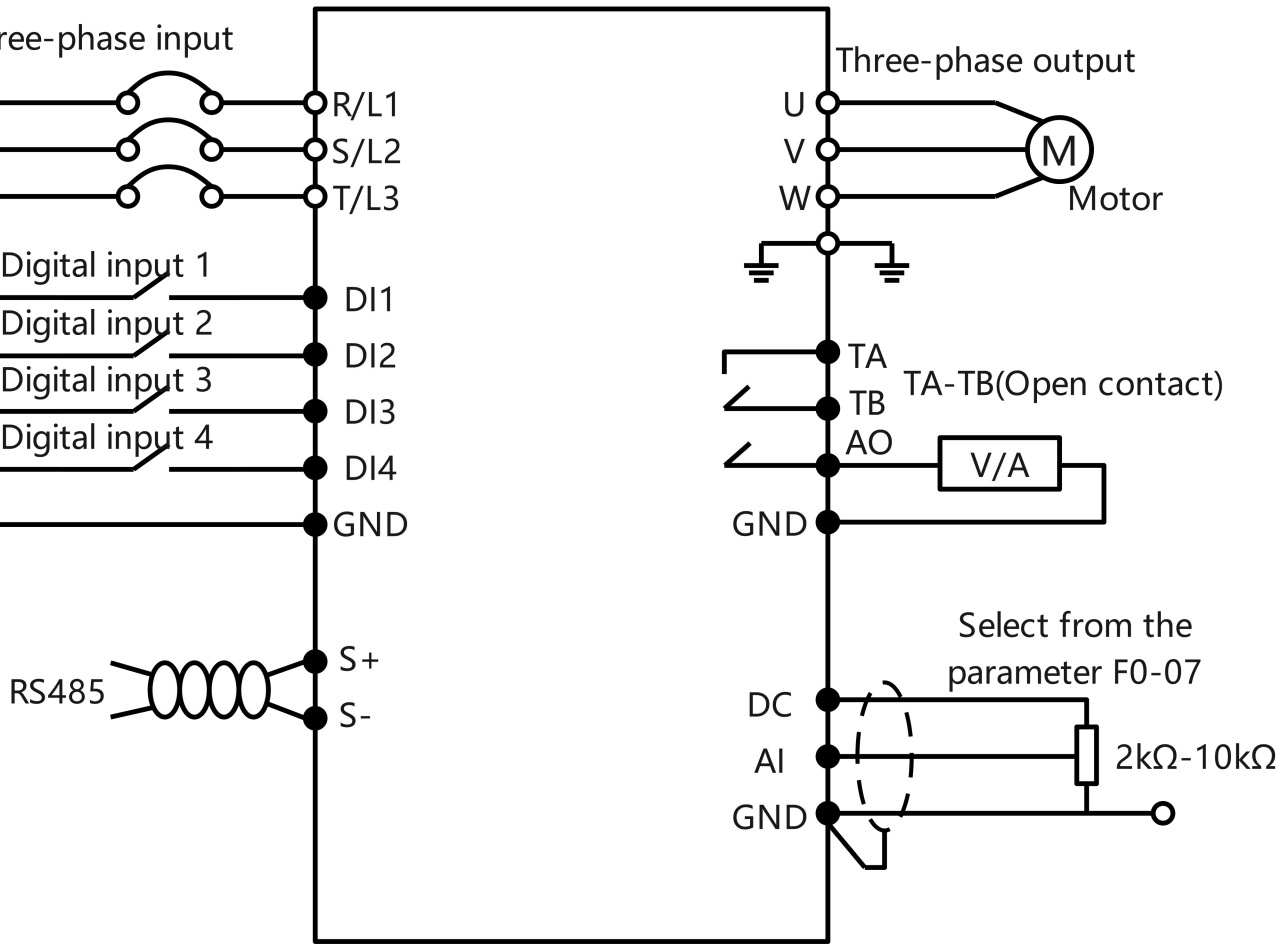

*s+/s- need to be connected with an external RS485 module.

删除[Mayday Mayday]: 900

General type three-phase 380V terminal wiring diagram:

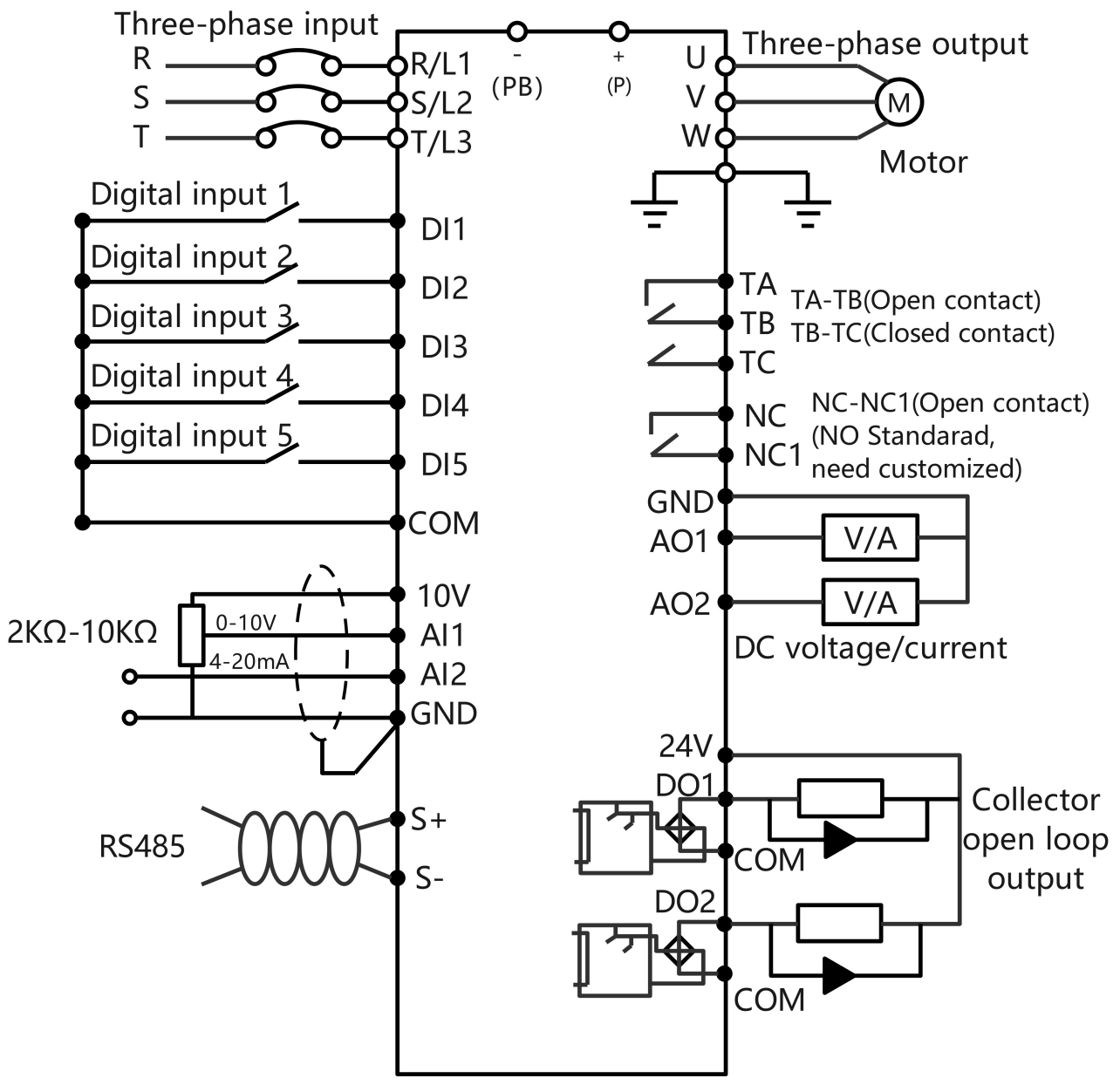

*NC NC1 is not standard function, production depends on purchasing order.

*0.75~5.5KW built-in braking unit, external braking resistor connected to P and PB terminals.

*Inverter above 5.5KW need to be connected with an external braking unit.

删除[Mayday Mayday]: 900

Chapter 4 Keypad and Display Operation

4.1 General Type Operation Panel

You can modify the parameters, monitor the working status, and start or stop the inverters by operating the panel.

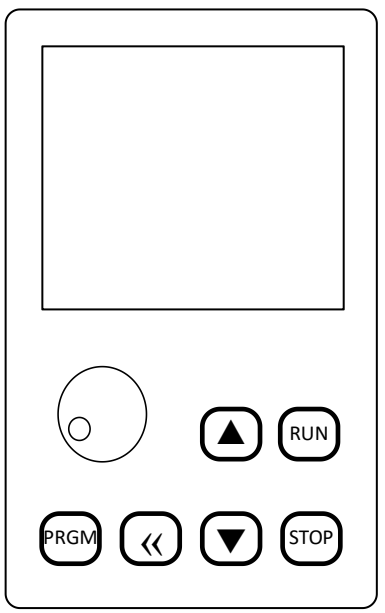

Operation Panel Diagram (General Type)

Function Indicator Description:

FWD：Forward Running Indicator REV：Reverse Running Indicator

STOP：Stop Indicator ALARM: Fault Indicator

4.2 General Type Keyboard Function Description

Key Sign	Name	Function Description
PRGM	Program/Enter	Long press more than 3 seconds enter/back main menu. Press to read /write parameter.
▲	Increase	Increase the data or the function code.
▼	Decrease	Decrease the data or the function code.

删除[Mayday Mayday]: 900

<<	Shift	Select the parameter modification and display content.
RUN	Run	Panel start.
STOP	Stop/Reset	Stop/reset operation.

4.3 Mini Type Operation Panel (0.75-2.2KW)

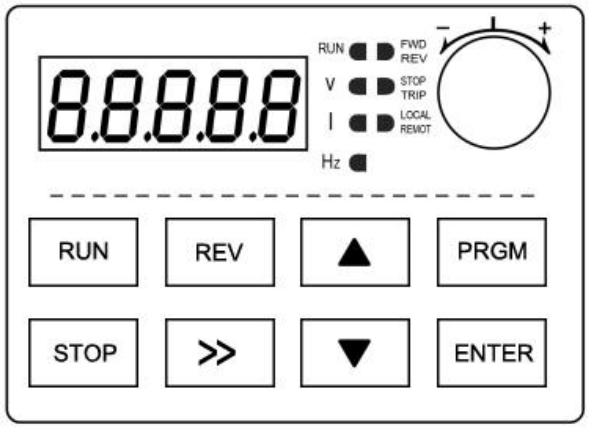

Operation Panel Diagram (Mini Type)

Running Indicator: Light on when inverter is running; light off when inverter stops.

LOCAL/Remote mode indicator: Light off when local speed adjustment; light on when remote speed adjustment.

FWD/REV: Light off when inverter is forward running; Light on when inverter is reverse running.

4.4 Mini Type Keyboard Function Description (0.75-2.2KW)

Key Sign	Description	Key Sign	Description
RUN	Running indicator: Frequency converter running often bright; Extinguish when it stops.	▲	Increase the number upward.
LOCAL REMOT	Local/remote mode indicator: When the local speed is off; Remote speed control often bright.	▼	Decrease the number downward.
FWD REV	Forward/reverse indicator light: Extinguish at positive turn; Inversion often bright; .	RUN	In panel control mode, for running operation.
PRGM	Enter the parameter interface from the main interface or return.	STOP	Stop operation; Or fault reset operation.
ENTER	Save or modifying parameters.	REV	In panel control mode, it is used for reverse and jog switching.
▶	Switch between interfaces; Or switch the number of digits.		

删除[Mayday Mayday]: 900

4.2 General Type Panel Operation

（1） Running and stopping

The default mode is the panel control mode (parameter F0-00 = 0). The Run key run the inverter and the STOP key controls the inverter to stop. When the inverter is running, the main interface display frequency value; When the inverter stops, the frequency value flashes.

（2） Switching running interface

When the inverter is running, the screen displays the main interface by default. At this time, press the " key, and the screen will switch among various operating interfaces, starting with the output frequency, and then displaying the motor speed, output voltage, output current and output power in turn. Examples are shown in the following figure.

（3） Parameter switching

When displaying main interface, press "PRGM" to enter the first-level menu interface, and then select the parameter group you want to access through "Up/Down" in the first-level menu interface; Press "ENTER" to enter the second-level menu interface from the first-level menu interface, where you can select the parameters which can be modified. Press "ENTER" again, and you will enter the third-level menu interface from the second-level menu interface. At this time, you can check or modify the value of this parameter.

When the inverter displays the third-level menu interface, you can press "PRGM" or "ENTER" to return to the second-level menu interface but pressing "PRGM" will not save the modified parameters, only pressing "ENTER" will save the parameters. When the inverter displays the first-level menu interface, press "PRGM" to return to the main interface.

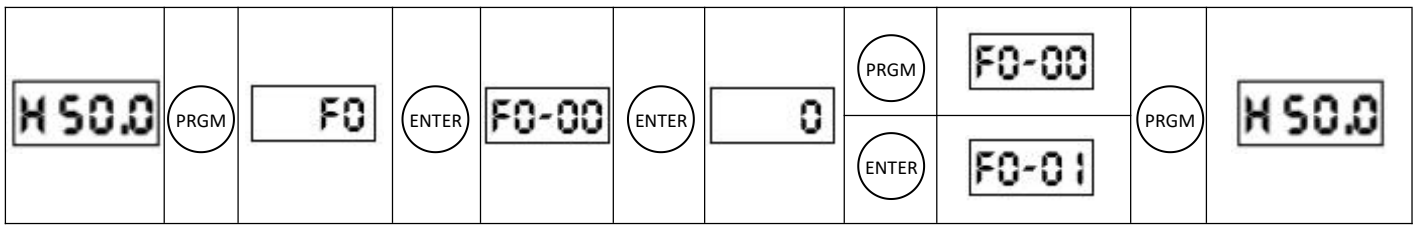

（4） Selection of parameters

When the second-level menu interface is displayed, press "Up" or "Down" to switch the parameters you want to access.

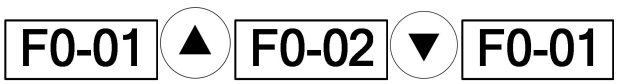

The inverter also has monitoring parameters. The way to view them is to find U0 in the first-level menu interface, and then press "ENTER" to enter the monitoring parameter access interface.

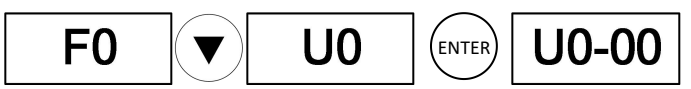

（5） Reset parameters

The parameter F0-24 can be used to reset the parameter. The default value of F0-24 is 0. Change it to 1 and press "ENTER". You can reset the parameters to factory default values.

删除[Mayday Mayday]: 900

4.6 Cases Study

4.6.1 Inverter Three-wire Setting

0：Two-wire mode 1: (Mini type)

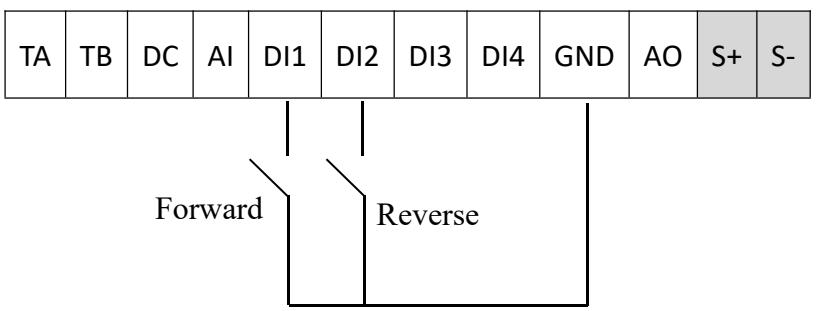

Parameter settings:

F0-00=1 (external terminal control)

F1-06=1 (Two-wire type 1)

F1-00=1

F1-01=2

In this control mode, DI1 and GND are turned on, and the inverter is running forward; DI2 and GND are turned on, and the inverter runs in reverse.

1：Two-wire mode 2：(Mini type)

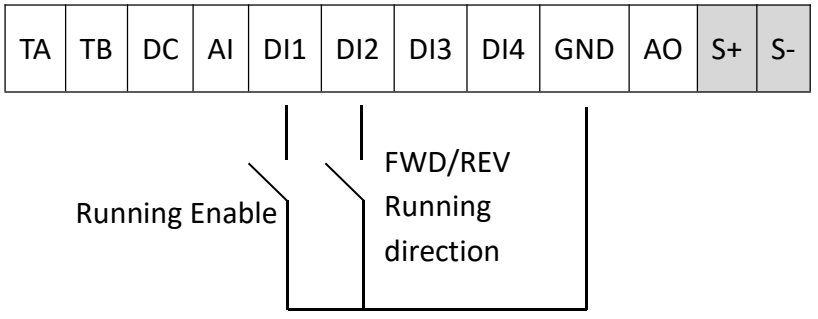

Parameter settings:

F0-00=1 (external terminal control)

F1-06=1 (Two-wire type 2)

F1-00=1

F1-01=2

In this control mode, when DI1 and GND are turning on, and the inverter is running forward; When DI1 and GND are on, DI2 and GND are on, and the inverter runs in reverse.

2：Three-wire mode 1：(Mini type)

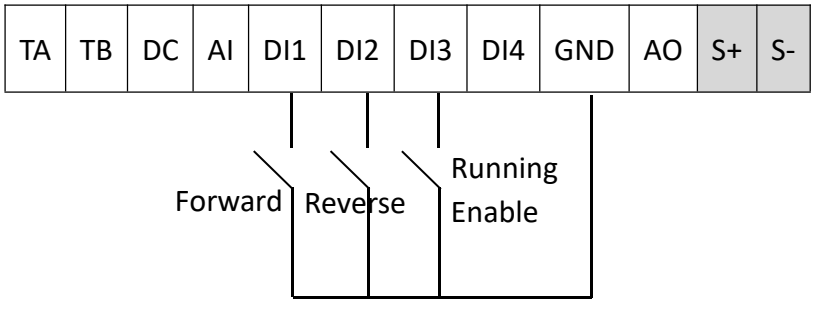

删除[Mayday Mayday]: 900

Parameter settings:

F0-00=1 (External terminal control)

F1-06=2 (Three-wire type 1)

F1-00=1

F1-01=2

F1-02=3

In this control mode, when DI3 and GND are turned on, DI1 and GND are turned on, and the inverter runs in a forward direction; When DI3 and GND are on, DI2 and GND are on, and the inverter runs in reverse. During normal start-up and operation, DI3 and GND must be conducted, and the commands of DI1 and DI2 will take effect at the edge of conducting action. The running state of the inverter will be subject to the last key action of these three switches.

3：Three-wire mode 2：(Mini type)

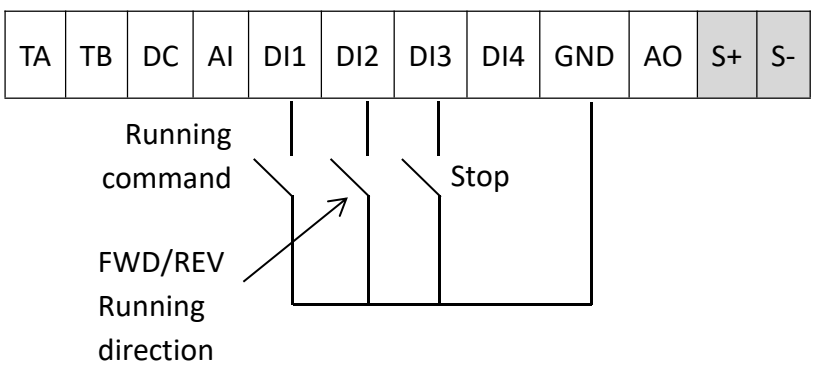

Parameter settings:

F0-00=1 (External terminal control)

F1-06=3 (Three-wire type 2)

F1-00=1

F1-01=2

F1-02=3

In this control mode, when DI3 and GND are turned on, DI1 and GND are turned on, and the inverter runs in a forward direction; When DI3 and GND are turned on and DI1 and GND are turned on, turn DI2 and GND on, and the inverter will run in reverse. During normal startup and operation, DI3 and GND must be kept on, and the command of DI1 will take effect as soon as it is turned on.

4.6.2 Multi-speed settings (mini type)

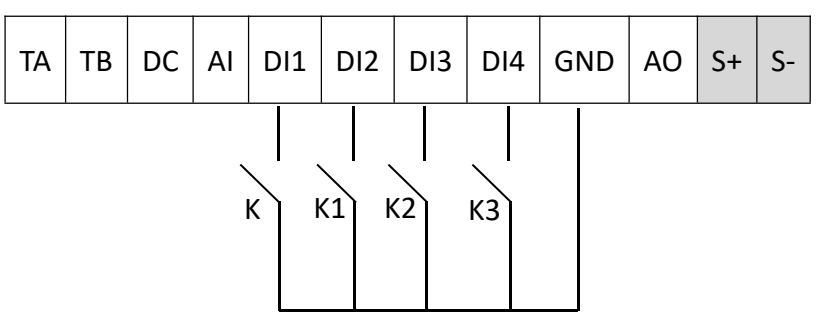

Parameter settings:

删除[Mayday Mayday]: 900

F0-00=1 (external terminal control)
F0-01=4 (Frequency source is selected as multi-speed)
F1-00=1 (DI1 terminal connected to external switch K)
F1-01=8 (DI2 terminal connected to external switch K1)
F1-02=9 (DI3 terminal connected to external switch K2)
F1-03=10 (DI4 terminal connected to external switch K3)

Parameter group F1 defines multi-segment speed function, 8 represents multi-segment command 1,9 represents multi-segment command 2, and 10 represents multi-segment command 3, 3 terminals can be combined into 8 speed segments, and the frequency values of 8 speed segments can be set by F4-01~F4-08 respectively, and the corresponding truth table is as follows：

K3	K2	K1	Command Setting	Corresponding parameters
OFF	OFF	OFF	Multi-segment command 0	F4-01
OFF	OFF	**ON**	Multi-segment command 1	F4-02
OFF	**ON**	OFF	Multi-segment command 2	F4-03
OFF	**ON**	**ON**	Multi-segment command 3	F4-04
ON	OFF	OFF	Multi-segment command 4	F4-05
ON	OFF	**ON**	Multi-segment command 5	F4-06
ON	**ON**	OFF	Multi-segment command 6	F4-07
ON	**ON**	**ON**	Multi-segment command 7	F4-08

When the frequency source is multi-speed, the function code F4-01-F4-07 can directly set the frequency value of multi-speed. In addition to the multi-segment speed function, multi-segment command can also be used as a given source of PID, or as a voltage source of V/F separation control, etc., to meet the need of switching between different given values.

4.6.3 Application of Inverter Constant Pressure Water Supply Function

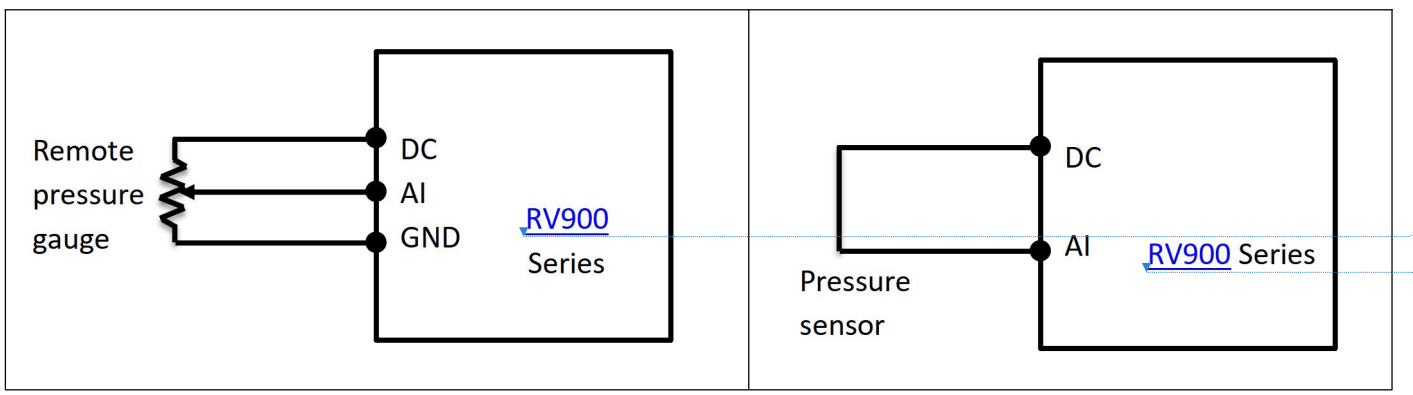

删除[Mayday Mayday]: 900

删除[Mayday Mayday]: 900

(Mini type inverter)

Parameter settings:

F0-00=0 or 1 (Panel or external terminal starts)
F0-01=6 (Constant pressure water supply function mode)
F5-02=0 or 1 (PID feedback source, 0 is generally connected to the remote pressure gauge, and 1 is generally connected to the pressure sensor)
F5-08=0/1/2/3 (Sensor type selection, 0:0~10V input can be selected; 1:4~20mA input; 2:0~5V

删除[Mayday Mayday]: 900

input;3:0.5V~4.5V input)
F5-09 (Sensor range)

4.6.4 Application of Multi-inverter Network Function (Taking three inverters as an example)

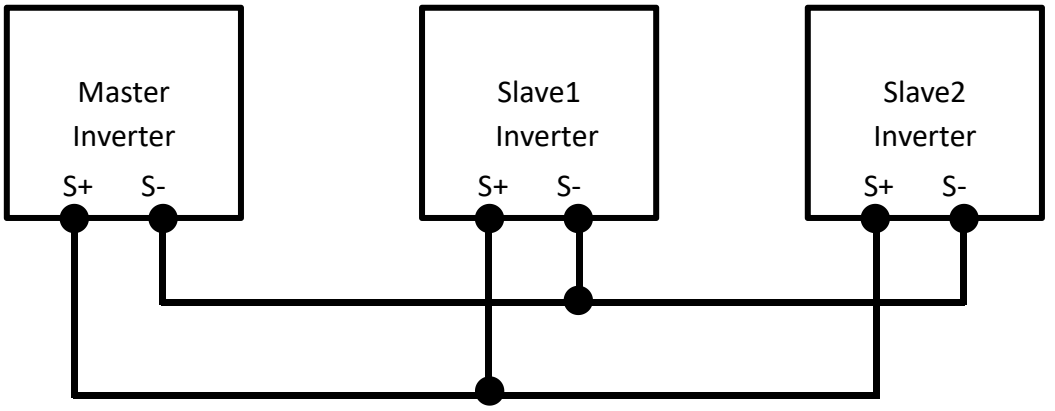

1. Three inverters network, multi-pump master and slave control mode

Parameters setting:

Master	Slave 1	Slave 2
F0-26=3 (3 inverters network master setting) F5-32=0(multi-pump master and slave control) F5-35(alternating pump period) F5-37(adding pump frequency) F5-38(under-pressure adding pump time) F5-39(reducing pump frequency) F5-40(over-pressure reducing pump time)	F0-26=11 (slave 1 in the network setting)	F0-26=12 (slave 2 in the network setting)

2. Three inverters network, multi-pump synchronous control mode

Parameters setting:

Master	Slave 1	Slave 2
F0-26=3(3 inverters network master setting) F5-32=1(multi-pump synchronous control)	F0-26=11 (slave 1 in the network setting)	F0-26=12 (slave 2 in the network setting)

3. Three inverters network, multi-pump one for use one for standby control mode

Parameters setting:

Master	Slave 1	Slave 2
F0-26=3(3 inverters network master setting) F5-32=2(multi-pump one for use one for standby control)	F0-26=11 (slave 1 in the network setting)	F0-26=12 (slave 2 in the network setting)

删除[Mayday Mayday]: 900

4. Three inverters network, standby master running mode; This function is applicable to any of the above three modes; Only slave 1 can be set as the standby master

Parameters setting:

Master	Slave 1	Slave 2
F0-26=3 (3 inverters network master setting) F5-32=0/1/2	F0-26=11(slave 1 in the network setting) F5-33=0/1/2(0：The standby master controls other slaves in the network stop together 1：The standby master controls other slaves in the network run as the F5-34 setting frequency at constant speed 2：The standby master controls other slaves in the network run at constant pressure(This mode requires the standby master to connect to the pressure sensor) F5-34(Standby master running frequency) F5-46=1(Standby master and slave quantity)	F0-26=12 (slave 2 in the network setting)

4.6.5 Application of one inverter controls multiple pumps

1. Two pumps alternate mode

删除[Mayday Mayday]: 900

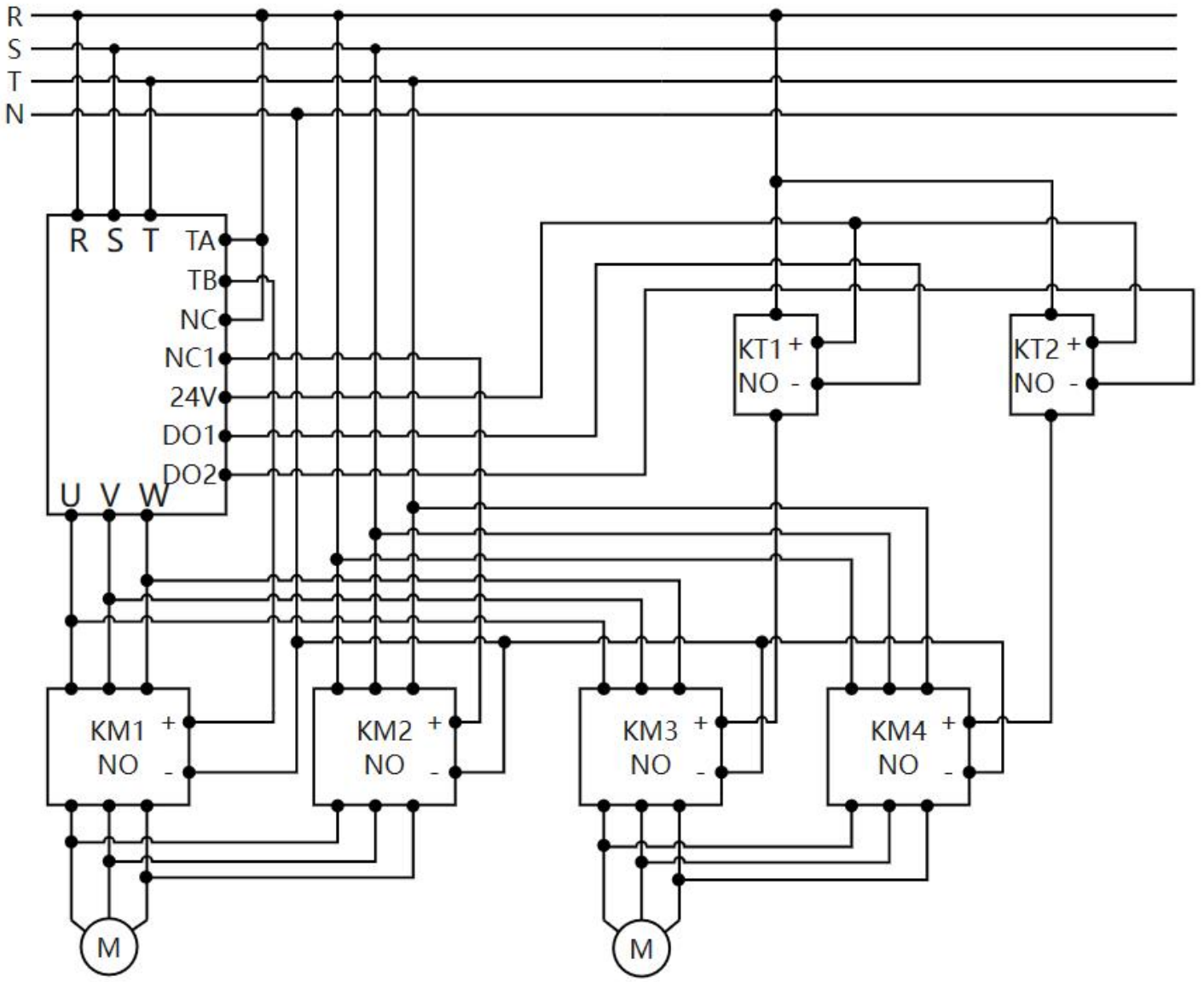

Parameters setting：

F0-26=07(Two pumps alternate automatically)

F5-35(Alternating pump period)

F5-37(Adding pump frequency)

F5-38(Under-pressure adding pump time)

F5-39(Reducing pump frequency)

F5-40(Over-pressure reducing pump time)

F5-45=1(Number of pumps running at the same time)

2. Fix one pump for inverter mode(The wiring diagram takes one for inverter, three for grid power as an example)

删除[Mayday Mayday]: 900

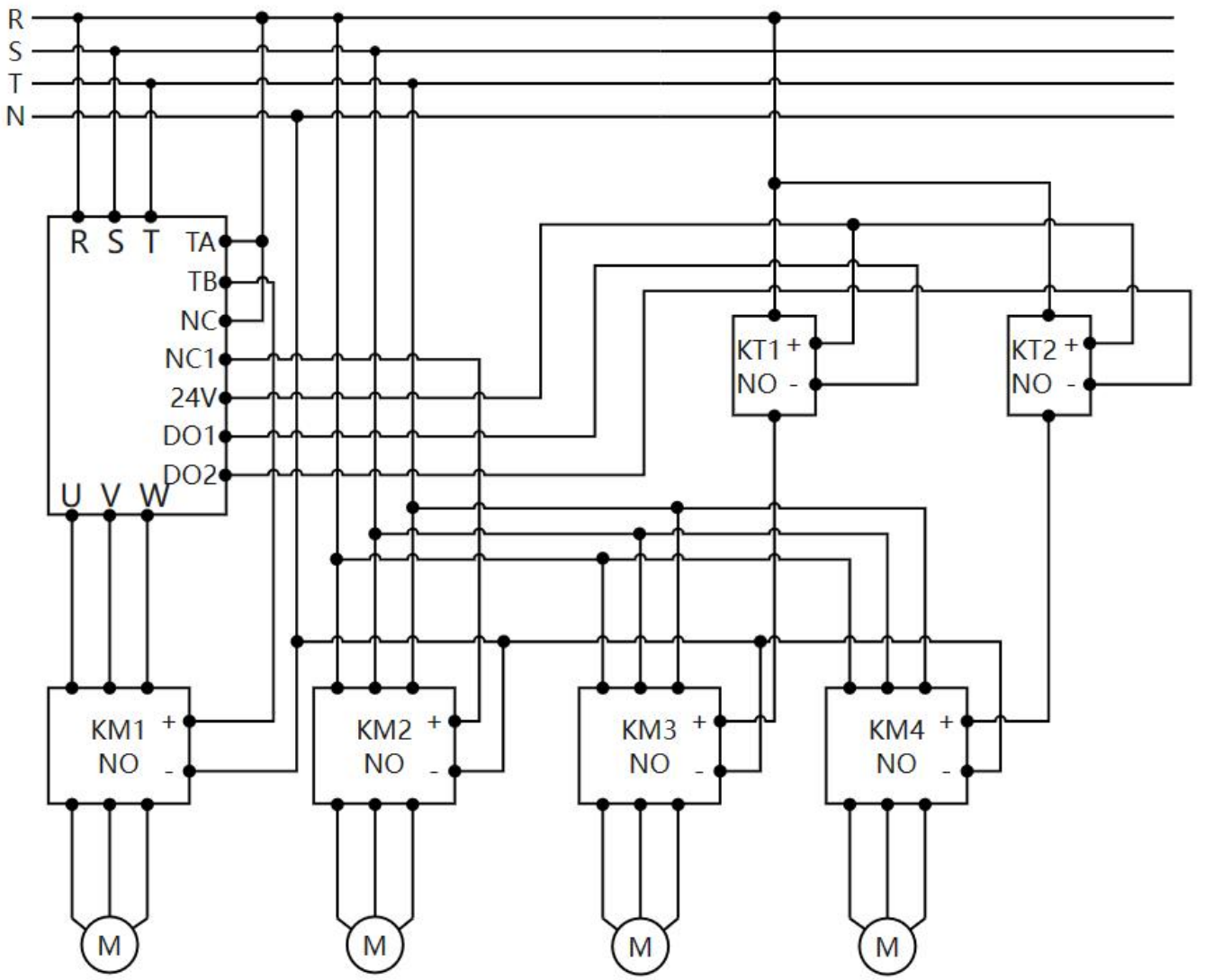

Parameters setting：

F0-26=17/18/19(17： One for inverter, one for grid power(Fix pump 1 for inverter, pump 2 for grid power, do not alternate; 18： One for inverter, two for grid power(Fix pump 1 for inverter, pump 3 for grid power, do not alternate； 19： One for inverter, three for power conversion(Fix pump 1 for inverter, pump 2/3/4 for power frequency, don’t alternate)

F5-37(Adding pump frequency)

F5-38(Under-pressure adding pump time)

F5-39(Reducing pump frequency)

F5-40(Over-pressure reducing pump time)

Chapter 5 Parameters

The symbols in the function code table are described as follows:

"☆": The parameter can be modified when the inverter is in either stop or running state.

"★": The parameter cannot be modified when the inverter is in the running state.

"●": The parameter is the measured value in real-time and cannot be modified.

"*": The parameter is factory parameter and can be set only by the manufacturer, not available for user.

"▲": The parameter is factory parameter and can be set only by the manufacturer, not available for user.

删除[Mayday Mayday]: 900

5.1 Parameters Overview

Function Code	Name	Function Code	Name
F0-00	Command source selection	F0-15	Speed tracking start
F0-01	Main frequency source selection	F0-16	Preset frequency
F0-02	Auxiliary frequency source selection	F0-17	Running action frequency below lower limit frequency
F0-03	Frequency source selection	F0-18	Command source & frequency source binding
F0-04	Acceleration time	F0-19	JOG/REV key function selection
F0-05	Deceleration time	F0-20	STOP key function
F0-06	DC output selection	F0-21	Jog running frequency
F0-07	Analog input/output signal format	F0-22	Jog acceleration time
F0-08	Halt mode	F0-23	Jog deceleration time
F0-09	Upper limit frequency preset	F0-24	Restore factory parameters
F0-10	Lower limit frequency preset	F0-25	Select display menu type
F0-11	Torque boost	F0-26	Water pump running mode
F0-12	Torque boost cut-off frequency	F0-27	The rate of terminal UP/DOWM change speed
F0-13	Carrier frequency	F0-28	Keyboard language selection
F0-14	Running direction	F0-29	Engraving machine parameter selection

删除[Lingqi Meng (Meng Lingqi)]: 雕刻机参数选择

Function Code	Name	Function Code	Name
F1-00	DI1 terminal function selection	F1-18	Relay output current reaches 2 set value
F1-01	DI2 terminal function selection	F1-19	Relay output current reaches 2 bandwidth
F1-02	DI3 terminal function selection	F1-20	Relay1 output delay time
F1-03	DI4 terminal function selection	F1-21	Relay2 output delay time
F1-04	DI5 terminal function selection	F1-22	DO1 output delay time
F1-05	DI1~DI5 terminal valid mode selection	F1-23	DO2 output delay time
F1-06	Terminal command mode	F1-24	AI1 gain
F1-07	Relay terminal valid state selection	F1-25	AI1 offset
F1-08	Relay1 function selection	F1-26	AI2 gain
F1-09	Relay2 function selection	F1-27	AI2 offset
F1-10	DO1 output function selection(collector output)	F1-28	AO1 output function selection
F1-11	DO2 output function selection(collector output)	F1-29	AO2 output function selection
F1-12	Relay output frequency reaches 1 set value	F1-30	AO1 gain
F1-13	Relay output frequency reaches 1 bandwidth	F1-31	AO1 offset

删除[Mayday Mayday]: 900

F1-14	Relay output frequency reaches 2 set value	F1-32	AO2 gain
F1-15	Relay output frequency reaches 2 bandwidth	F1-33	AO2 offset
F1-16	Relay output current reaches 1 set value	F1-34	DI delay time
F1-17	Relay output current reaches 1 bandwidth		
Function Code	Name	Function Code	Name
F2-00	V/F curve setting	F2-15	V/F over- magnetizing gain
F2-01	Multi-point V/F frequency point 1	F2-16	VF over-voltage stall action voltage
F2-02	Multi-point V/F voltage point 1	F2-17	VF over voltage stall enable
F2-03	Multi-point V/F frequency point 2	F2-18	VF over-voltage stall suppression frequency gain
F2-04	Multi-point V/F voltage point 2	F2-19	VF over-voltage stall suppression voltage gain
F2-05	Multi-point V/F frequency point 3	F2-20	Maximum frequency limit of over-voltage stall
F2-06	Multi-point V/F voltage point 3	F2-21	Reserved
F2-07	Multi-point V/F frequency point 4	F2-22	Reserved
F2-08	Multi-point V/F voltage point 4	F2-23	Reserved
F2-09	Multi-point V/F frequency point 5	F2-24	V/F oscillation suppression gain
F2-10	Multi-point V/F voltage point 5	F2-25	Oscillation Suppression Gain Mode
F2-11	VF over-current stall action current	F2-26	Voltage source for V/F separation
F2-12	VF over-current stall enable	F2-27	Digital setting of voltage for V/F separation
F2-13	VF over-current stall inhibition gain	F2-28	Voltage rise and decline time of V/F separation
F2-14	VF multiple over-current stall action current compensation coefficient	F2-29	Stop mode selection for V/F separation
Function code	Name	Function code	Name
F3-00	Start frequency	F3-14	Skip frequency 1
F3-01	Start frequency hold time	F3-15	Skip frequency bandwidth
F3-02	Start DC braking current	F3-16	Dead time of forward & reverse rotations
F3-03	Start DC braking time	F3-17	Reverse rotation control
F3-04	DC braking initial frequency at stop	F3-18	Brake utilization ratio
F3-05	DC braking waiting time at stop	F3-19	Brake chopper action voltage
F3-06	DC braking current at stop	F3-20	Speed tracking mode
F3-07	DC braking time at stop	F3-21	Speed tracking
F3-08	Acc./Dec. mode	F3-22	Speed tracking current loop Kp
F3-09	Time proportion of S-curve initial-segment	F3-23	Speed tracking current Ki
F3-10	Time proportion of S-curve end segment	F3-24	Speed tracking current value
F3-11	Acceleration time 2	F3-25	Speed tracking current lower limit
F3-12	Deceleration time 2	F3-26	Speed tracking voltage increasing

删除[Mayday Mayday]: 900

			time
F3-13	Acc. time1 & acc. time 2 frequency switching point	F3-27	Demagnetizing time
Function code	Name	Function code	Name
F4-00	Multi-segment command 0 frequency source	F4-14	PLC segment 1 running time
F4-01	Multi-reference 0 frequency	F4-15	PLC segment 1 acc./dec. time selection
F4-02	Multi-reference 1 frequency	F4-16	PLC segment 2 running time
F4-03	Multi-reference 2 frequency	F4-17	PLC segment 2 acc./dec. time selection
F4-04	Multi-reference 3 frequency	F4-18	PLC segment 3 running time
F4-05	Multi-reference 4 frequency	F4-19	PLC segment 3 acc./dec. time selection
F4-06	Multi-reference 5 frequency	F4-20	PLC segment 4 running time
F4-07	Multi-reference 6 frequency	F4-21	PLC segment 4 acc./dec. time selection
F4-08	Multi-reference 7 frequency	F4-22	PLC segment 5 running time
F4-09	PLC running mode	F4-23	PLC segment 5 acc./dec. time selection
F4-10	PLC power off save selection	F4-24	PLC segment 6 running time
F4-11	PLC running time unit	F4-25	PLC segment 6 acc./dec. time selection
F4-12	PLC segment 0 running time	F4-26	PLC segment 7 running time
F4-13	PLC segment 0 acc./dec. time selection	F4-27	PLC segment 7 acc./dec. time selection
Function code	Name	Function code	Name
F5-00	PID reference source	F5-25	Antifreezing function enable
F5-01	PID reference value	F5-26	Antifreezing running frequency
F5-02	PID feedback source	F5-27	Antifreezing running time
F5-03	PID action direction	F5-28	Antifreezing running period
F5-04	Acc. PID proportional gain Kp	F5-29	Auto start enable
F5-05	Acc. PID integral time Ki	F5-30	Auto start delay time
F5-06	Dec. PID proportional gain Kp	F5-31	Reserved
F5-07	Dec. PID integral time Ki	F5-32	Multi-pump network mode
F5-08	Sensor type	F5-33	Standby master running mode
F5-09	Sensor scale	F5-34	Standby master 1 running frequency
F5-10	Sensor zero deviation	F5-35	Alternating pump switching period
F5-11	Sensor full scale deviation	F5-36	Adding pump pressure deviation
F5-12	Dormant frequency	F5-37	Adding pump frequency
F5-13	Dormant delay time	F5-38	Under-pressure adding pump time
F5-14	Dormant pressure deviation	F5-39	Reducing pump frequency
F5-15	Dormant dec. frequency step	F5-40	Over-pressure reducing pump time
F5-16	Dormant dec. judging time	F5-41	PID feedback loss detection value
F5-17	Wake up pressure	F5-42	Burst pipe pressure

删除[Mayday Mayday]: 900

F5-18	Pressure upper limit	F5-43	Burst pipe judging time
F5-19	Water shortage detection time	F5-44	Reserved
F5-20	Water shortage detection frequency	F5-45	Maximum number of pumps running at the same time
F5-21	Water shortage detection current	F5-46	Standby master and slave quantity
F5-22	Water shortage detection pressure	F5-47	Secondary target pressure setting
F5-23	Water shortage restart time interval	F5-48	Adding pump switching delay
F5-24	Water shortage auto restart pressure	F5-49	Grid power and frequency conversion switching delay
Function code	Name	Function code	Name
F6-00	Zero-level menu display data auto switching	F6-15	Start protection selection
F6-01	Parameters modify attribute	F6-16	Fault enable selection 1
F6-02	LED2 display data selection (dual display reserved parameter)	F6-17	Fault enable selection 2
F6-03	User password	F6-18	Fault auto reset times
F6-04	Setting accumulative power-on achieving time	F6-19	Fault auto reset interval time
F6-05	Regular running time	F6-20	Drop load protection selection
F6-06	Carrier frequency adjusting with temperature	F6-21	Drop load detection level
F6-07	Carrier frequency adjusting start temperature	F6-22	Drop load detection time
F6-08	Carrier frequency adjusting time	F6-23	Voltage sag function selection
F6-09	DPWM switching upper limit frequency	F6-24	Voltage sag judging voltage
F6-10	Excessive speed deviation detection value	F6-25	Voltage sag recovery judging tine
F6-11	Excessive speed deviation detection time	F6-26	Voltage sag action judging voltage
F6-12	Motor overload protection gain	F6-27	Voltage sag gain
F6-13	External temperature sensor type	F6-28	Voltage sag integral coefficient
F6-14	Overtemperature protection threshold	F6-29	Voltage sag action deceleration time
Function code	Name	Function code	Name
F7-00	Local address	F7-11	Torque reception data offset
F7-01	Baud rate	F7-12	Torque reception data gain
F7-02	Data format	F7-13	Frequency reception data offset
F7-03	Communication timeout	F7-14	Frequency reception data gain
F7-04	Master and slave control valid (For RV900M, this parameter is MODBUS data communication format, see F7-19)	F7-15	Salve frequency forward maximum deviation
F7-05	Master and slave selection	F7-16	Salve frequency reverse maximum deviation
F7-06	Number of slaves	F7-17	Droop control
F7-07	Slave follows master command	F7-18	Reserved
F7-08	Slave data reception	F7-19	MODBUS data communication format
F7-09	Master and slave communication	F7-20	Enable old inverter Modbus

删除[Mayday Mayday]: 900

删除[Mayday Mayday]: 900

	timeout time		
F7-10	Master and slave control communication transmission period		
Function code	Name	Function code	Name
F8-00	Motor rated power	F8-10	Torque set value
F8-01	Motor rated voltage	F8-11	Asynchronous motor stator resistance
F8-02	Motor rated current	F8-12	Asynchronous motor rotor resistance
F8-03	Motor rated frequency	F8-13	Asynchronous motor leakage inductance
F8-04	Motor rated speed	F8-14	Asynchronous motor mutual inductance reactance
F8-05	Permanent magnet motor back EMF coefficient	F8-15	Asynchronous motor no-load current
F8-06	Motor control mode	F8-16	Synchronous motor stator resistance
F8-07	Motor parameter self-detection	F8-17	Synchronous motor D-axis inductance
F8-08	Speed/torque control selection	F8-18	Synchronous motor Q-axis inductance
F8-09	Torque setting source selection		
Function code	Name	Function code	Name
F9-00	High speed area switching frequency	F9-21	Maximum torque ratio current enable
F9-01	Speed loop proportional gain at high speed	F9-22	Convexity gain coefficient
F9-02	Speed loop integral time of high-speed segment	F9-23	Starting carrier frequency
F9-03	Low speed segment switching frequency	F9-24	SVC low-speed carrier frequency
F9-04	Speed loop proportional gain at low speed	F9-25	Low speed carrier frequency switching frequency
F9-05	Speed loop integral time of low-speed segment	F9-26	Low-speed maximum excitation current
F9-06	Velocity loop filtering time constant	F9-27	Low-speed excitation current switching frequency
F9-07	Slip compensation coefficient	F9-28	Low-speed excitation current switching frequency bandwidth
F9-08	Maximum output voltage coefficient	F9-29	Synchronous motor initial position detection mode
F9-09	Torque control forward maximum frequency	F9-30	Synchronous motor initial position identification current initial value
F9-10	Torque control reverse maximum frequency	F9-31	Synchronous motor initial position compensation angle
F9-11	Torque acceleration time	F9-32	Synchronous electrical sensing current
F9-12	Torque deceleration time	F9-33	Synchronous motor back EMF identification initial current
F9-13	M-axis current loop KP	F9-34	Synchronous motor back EMF identification final current
F9-14	M-axis current loop KI	F9-35	Synchronous motor tuning current loop KP

F9-15	T-axis current loop KP	F9-36	Synchronous motor tuning current loop Ki
F9-16	T-axis current loop KI	F9-37	Reserved
F9-17	Synchronous motor flux weakening mode	F9-38	Reserved
F9-18	Synchronous motor flux weakening coefficient	F9-39	Reserved
F9-19	Flux weakening integral multiple	F9-40	Reserved
F9-20	Output voltage saturation margin		

删除[Mayday Mayday]: 900

5.2 Parameters Description

5.2.1 F0 Parameter Group – Basic Parameters

设置格式[Lingqi Meng (Meng Lingqi)]: 行距: 2 倍行距

Parameter	Description	Minimum Value	Default Value	Maximum Value	Unit	Change Permission
F0-00	Command Source Selection	0	0	3	-	☆
	0: Panel control. Press the RUN key of the inverter to run and press the STOP key to stop. 1: Terminal control. It is directly controlled by the inverter control terminal. By default, DI1 controls forward rotation and DI2 controls reverse rotation. 2. Communication control. It is controlled by Modbus RTU (RS485). 3.Reserved					
F0-01	Main Frequency Source Selection	0	1	9	-	★
	0: function code setting, power-off memory 1: panel potentiometer 2： AI1 3: AI2 (reserved) 4: Multi-segment command 5: PLC 6: Constant pressure water supply 7: General PID 8: Communication Settings 9: Reserved					
F0-02	Auxiliary Frequency Source Selection	0	0	9	-	★
	Same as F0-01					
F0-03	Frequency Source Selection	00	00	34	-	☆
	Bit: frequency source selection 0: main frequency source 1: primary and secondary operation results (the operation relationship is determined by ten digits) 2. Switch between the main frequency source and the auxiliary frequency source 3. Switch between main frequency source and main and auxiliary operation results. 4. The auxiliary frequency source and the main and auxiliary operation results Ten digits: the main and auxiliary operation relationship of frequency source. 0: Primary + Secondary 1: Primary - secondary 2: The maximum value of both 3: The minimum value of both					

删除[Mayday Mayday]: 900

F0-04	Acceleration Time	0	Depends on model	500.0	second	☆
	The acceleration time required for the inverter to accelerate from 0 Hz to the upper limit frequency (F0-09).					
F0-05	Deceleration Time	0	Depends on model	500.0	second	☆
	The deceleration time required for the inverter to decelerate from the upper limit frequency (F0-09) to 0 Hz.					
F0-06	Control Terminal DC Output Selection	0	1	2	-	★
	0：5V Output 5V DC voltage 1：10V Output voltage of 10V DC 2：24V Output DC 24V voltage					
F0-07	Analog Input and Output Signal Format	0000	0000	5555	-	★
	0：0-10V 1：0-20mA 2：4-20mA 3: 20-4mA 4: 20-0mA 5:10-0V Bit: AI1; Ten bits: AI2 ; Hundreds: AO1 ; Thousands: AO2					
F0-08	Stop Mode	0	0	1	-	☆
	0: Ramp to stop. After the shutdown command is effective, the inverter reduces the output frequency according to the deceleration time and stops after the frequency drops to 0. 1: Coast to stop. After the shutdown command is effective, the inverter immediately stops the output, and the motor stops freely according to the mechanical inertia.					
F0-09	Frequency Upper limit	F0-10	50.0	599.9	Hz	☆
	Inverter maximum output frequency					
F0-10	Frequency Lower limit	0.0	0.0	F0-09	Hz	☆
	Inverter minimum output frequency					
F0-11	Torque Boost	0	Depends on model	30.0	%	☆
	Under the V/F control mode, the output torque of the motor is relatively low in low frequency operation, which can increase the value of this parameter; However, the torque boost setting is too large, the motor is easy to overheat, and the inverter is easy to overcurrent. When the load is heavy and the starting torque of the motor is insufficient, it is recommended to increase this parameter. When the load is light, the torque can be reduced.					
F0-12	Torque Boost Cut-off Frequency	0.0	50.0	F8-03	Hz	★
	Below this frequency, the torque boost is effective, and beyond this set frequency, the torque boost fails.					
F0-13	Switching Frequency	1.0	Depends on model	16.0	kHz	☆
	This function adjusts the switching frequency of the inverter. When the switching frequency is low, the higher harmonic component of the output current increases, the motor loss increases, and the motor temperature rises. When the switching frequency is					

删除[Mayday Mayday]: 900

	high, the motor loss decreases, the motor temperature rises, but the frequency is changed. The loss of inverter increases, the temperature rise of inverter increases, and the interference increases.					
F0-14	Output Phase Sequence	0	0	1	-	☆
	0：U V W 1：U W V Changing this parameter can change the motor direction without changing the motor wiring. Note: after the parameter is initialized, the parameter will return to the default value of 0, so be careful on some occasions where it is forbidden to change the motor direction.					
F0-15	Speed Tracking Start	0	0	1	-	☆
	0: Disable 1: Enable When the inverter starts, there is a short time delay to detect the motor speed and control it from the current motor speed.					
F0-16	Preset Frequency	F0-10	F8-03	F0-09	Hz	☆
	When the target frequency setting mode is selected as "Digital Setting", this parameter sets the initial value for the target frequency of the inverter. After the target frequency is modified by the "Up/Down" key, this parameter will become invalid temporarily, unless this parameter is modified again.					
F0-17	Low Frequency Action	0	0	2	-	☆
	0：Running at lower limit frequency 1：Stop 2：Zero-speed running When the set frequency is below the lower limit frequency, the running state of the inverter can be selected by this parameter.					
F0-18	Command Source & Frequency Source Binding	000	000	999	-	☆
	Bit: operation panel command binding frequency source selection 0: no binding 1: The up and down keys on the panel are given (the terminal UP/DOWN can be modified, and the power-off memory) 2: Panel potentiometer 3：AI1 4：AI2 5: Multi-speed 6：PLC 7: Constant pressure water supply PID 8: General PID 9: Communication Settings Ten bits: terminal command binding frequency source selection Hundred bits: communication command binding frequency source selection Define the binding combination between three running command channels and nine channels with given frequencies, which is convenient to realize synchronous switching.					

F0-19	JOG/REV Key Function Selection	0	0	4	-	★
	0：JOG/REV invalid 1： The command channel of the operation panel is switched with the remote command channel (terminal command channel or communication command channel). 2：Forward/reverse switching 3：Forward jogging 4：Reverse jogging The JOG/REV key is a multi-function key, which can be switched during stop and operation. (only available on the RV900M key panel). The RV900G key panel requires both the "Increase " key and "Decrease " key to be pressed together for switching.					
F0-20	STOP Key Function	0	1	1	-	☆
	0: Only in keyboard operation mode, the stop function of it is effective. 1: Under any operation mode, the stop function of it is effective.					
F0-21	Jog Running Frequency	0.0	2.0	F0-09	Hz	☆
F0-22	Jog Acceleration Time	0.0	20.0	6500.0	second	☆
F0-23	Jog Deceleration Time	0.0	20.0	6500.0	second	☆
	F0-21-F0-23 defines the given frequency and acceleration and deceleration time of the inverter when jogging.					
F0-24	Reset to Factory Parameters	0	0	65535	-	★
	1: Reset the factory settings.					
F0-25	Select the Display Menu Type.	1	1	3	-	★
	1: Default menu 2: Only the parameters changed by the user are displayed. 3: Reserved					
F0-26	Water pump running mode	0	1	19	-	★
	0: Manual mode 1: One for use, one for standby (single pump) 2: 2 inverters network master 3: 3 inverters network master 4: 4 inverters network master 5: 5 inverters network master 6: Reserved 7: Two pumps auto alternate) 8: Reserved 9: Reserved 11: Slave 1 in the network setting (Standby master) 12: Slave 2 in the network 13: Slave 3 in the network 14: Slave 4 in the network 15: Reserved 16: Reserved 17: One for inverter, one for grid power (Fix pump 1 for inverter, pump 2 for grid power, do not alternate) 18: One for inverter, two for grid power (Fix pump 1 for inverter, pump 2, pump 3 for grid					

删除[Mayday Mayday]: 900

删除[Mayday Mayday]: 900

删除[Mayday Mayday]: 900

	power, do not alternate) 19: One for inverter, three for grid power (Fix pump 1 for inverter, pump 2, pump 3, pump 4 for grid power, do not alternate)					
F0-27	The rate of terminal UP/DOWM change speed	0.001	1.000	65.535	Hz/s	☆
	When use terminal UP/DOWN mode to change speed, this parameter set speed change rate.					
F0-28	Keypad language selection (LCD keypad use)	0	0	100	-	☆
	0：Chinese 1：English 2-100：Reserved					
F0-29	Engraving machine parameter selection	0	0	1	-	☆
	0：Default parameter 1：Sets the parameters applied to the engraving machine					

删除[Mayday Mayday]: 900

删除[Lingqi Meng (Meng Lingqi)]: 雕刻机参数选择

删除[Lingqi Meng (Meng Lingqi)]: 通用参数

删除[Lingqi Meng (Meng Lingqi)]: 雕刻机专用参数

5.2.2 F1 Parameter Group – Terminal IO Function Selection

Parameter	Description	Minimum Value	Default Value	Maximum Value	Unit	Change Permission
F1-00	DI1 Terminal Function Selection	0	1	35	-	★
	0: No function 1: Forward running FWD 2: Reverse running REV 3: Three-wire mode running control 4: Two-wire/three-wire switching 5: Forward jog 6: Reverse jog 7: Fault reset 8: Multi-segment command terminal 1 9: Multi-segment command terminal 2 10: Multi-segment command terminal 3 11: External stop terminal, which is only valid for panel control. 12: Coast stop, that is, blocking PWM output. 13: External terminal shutdown (deceleration time 2, which is valid at any time) 14: Emergency stop 15: DC braking 16: Deceleration DC braking 17: External fault input (normally open) 18: External fault normally closed input 19: Running Command switch terminal 1 F0-00=1 or 2 is effective. When F0-00=1, this terminal can perform external terminal and keyboard key switching. When F0-00=2, this terminal can perform communication and keyboard key switching.					

删除[Mayday Mayday]: 900

	20: Command source switching terminal 2 Used for switching between external terminal control and communication command control; If the current state is set to external terminal control, when this terminal is valid, switch to communication command control and vice versa. 21: Terminal UP 22: Terminal DOWN 23: UP/DOWN setting is cleared. 24: Frequency source switching 25: Switch between the main frequency source and the preset frequency. 26: Switch between auxiliary frequency source and preset frequency. 27: Effective terminal for frequency setting. 28: Acceleration and deceleration are prohibited. 29: Acceleration and deceleration time selection terminal 1 30: PLC status reset 31: Speed control/torque control switching 32: Empty-water 33: Full-water 34: Secondary target pressure setting 35: Running pause					
F1-01	DI2 Terminal Function Selection	0	2	35	-	★
	Same as DI1.					
F1-02	DI3 Terminal Function Selection	0	8	35	-	★
	Same as DI1.					
F1-03	DI4 Terminal Function Selection	0	9	35	-	★
	Same as DI1.					
F1-04	DI5 Terminal Function Selection	0	10	35	-	★
	Same as DI1.					
F1-05	DI5-DI1 Terminal Effective Mode Selection	00000	00000	11111	-	★
	0: The high level is active. 1: The low level is active. Each of the five digits can only choose 0 or 1, which respectively correspond to the valid modes of DI1~5. They are: Bit: DI1; Ten: DI2; Hundreds: DI3; Thousands: DI4; Ten thousand bits: DI5					
F1-06	Terminal Command Mode	0	0	3	-	★
	0: Two-wire mode 1 **1**: Two-wire mode 2 **2**: Three-wire mode 1 **3**: Three-wire mode 2					
F1-07	DO Output Terminal Effective State Selection	0000	0000	1111	-	☆
	0: Positive logic 1. Negative logic					

删除[Mayday Mayday]: 900

	Bit: Relay 1 Ten bits: Relay 2 Hundreds: DO1 Thousand: DO2 Define the output logic of the output terminal.					
F1-08	Relay 1 Output Function Selection	0	1	27	-	☆
	The output terminal of each relay can provide 27 kinds of functions, these functions are: **0: No function.** **1. The inverter is running.** The inverter is in the running state, and when there is an output frequency (which can be zero), it outputs the ON signal. **2: Inverter fault.** When the inverter fails and stops, it outputs the ON signal. **3: Ready for running.** When the power supply of the main circuit and control circuit of the inverter is stable, and the inverter does not detect any fault information, and the inverter is in an operational state, the ON signal is output. **4: The upper limit frequency arrives.** When the operating frequency reaches the upper limit frequency, the ON signal is output. **5: The lower limit frequency arrives.** When the operating frequency reaches the lower limit frequency, the ON signal is output. This signal is OFF in the stop state. **6: Torque limit.** In the speed control mode of the inverter, when the output torque reaches the torque limit, the inverter is in the stall protection state and outputs the ON signal at the same time. **7. Communication control.** The relay output is controlled by Modbus RTU (RS485). **8: Motor overload pre-alarm.** Output ON signal before motor overload protection action. **9: Inverter overload pre-alarm.** Output the ON signal 10s before the overload protection of the inverter occurs. **10: Timed time exceeded.** When the running time of the inverter reaches the set timing time (F6-05), it outputs the ON signal. **11: The frequency reaches 1.** When the operating frequency of the inverter reaches the set value of F1-12, it outputs the ON signal. **12: The frequency reaches 2.** When the operating frequency of the inverter reaches the set value of F1-14, it outputs the ON signal. **13: The current reaches 1.** When the running current of the inverter reaches the set value of F1-16, it outputs the ON signal. **14: The current reaches 2.** When the running current of the inverter reaches the set value of F1-18, the ON signal is output. **15: AI1 input exceeds the upper or lower limits.** **16~19: Reserved** **20: Pump 1 runs in inverter mode.** Water supply mode judges pump 1 runs in inverter mode, output ON signal **21: Pump 1 runs in grid power mode.** Water supply mode judges pump 1 runs in grid power mode, output ON signal **22: Pump 2 runs in inverter mode.** Water supply mode judges pump 2 runs in inverter mode, output ON signal **23: Pump 2 runs in grid power mode.** Water supply mode judges pump 2 runs in grid					

删除[Mayday Mayday]: 900

	power mode, output ON signal **24: Pump 3 runs in inverter mode.** Water supply mode judges pump 3 runs in inverter mode, output ON signal **25: Pump 3 runs in grid power mode.** Water supply mode judges pump 3 runs in grid power mode, output ON signal **26: Pump 4 runs in inverter mode.** Water supply mode judges pump 4 runs in inverter mode, output ON signal **27: Pump 4 runs in grid power mode.** Water supply mode judges pump 4 runs in grid power mode, output ON signal					
F1-09	Relay 2 Output Function Selection	0	2	27	-	☆
	Same as F1-08					
F1-10	DO1 Collector Output Function Selection	0	1	27	-	☆
	Same as F1-08					
F1-11	DO2 Collector Output Function Selection	0	2	27	-	☆
	Same as F1-08					
F1-12	Relay Output Reaches Frequency Setting Value 1	0.0	50.0	F0-09	Hz	☆
	Set value of frequency when relay output function is set to 11. Set the ratio based on the rated value.					
F1-13	Relay Output Reaches Frequency Bandwidth 1	0.0	0.0	100.0	%	☆
	When the output frequency of the inverter is within the positive and negative detection width of any set arrival frequency, the relay 1 outputs ON signal.					
F1-14	Relay Output Reaches Frequency Setting Value 2	0	100	F0-09	Hz	☆
	Set value of frequency when relay output function is set to 12. Set the ratio based on the rated value.					
F1-15	Relay Output Reaches Frequency Bandwidth 2	0.0	0.0	100.0	%	☆
	When the output frequency of the inverter is within the positive and negative detection width of any set arrival frequency, the relay 2 outputs ON signal.					
F1-16	The Relay Output Reaches Current Set Value 1	0.0	100.0	300.0	%	☆
	Set value of frequency or current when relay output function is set to 13. Set the ratio based on the rated value.					
F1-17	Relay Output Reaches Current Bandwidth 2	0.0	0.0	300.0	%	☆
	When the output current of the inverter is within the set positive and negative detection width of any arrival current, the relay 1 outputs ON signal.					
F1-18	The Relay Output Reaches Current Set Value 2	0.0	100.0	300.0	%	☆
	Set value of frequency or current when relay output function is set to 14. Set the ratio					

删除[Mayday Mayday]: 900

	based on the rated value.					
F1-19	Relay Output Reaches Frequency Bandwidth 2	0.0	0.0	300.0	%	☆
	When the output current of the inverter is within the set positive and negative detection width of any arrival current, the relay 2 outputs ON signal.					
F1-20	Relay 1 Output Delay Time	0.0	0.0	3600.0	second	☆
	Delay time of relay 1 from state change to actual output change.					
F1-21	Relay 2 Output Delay Time	0.0	0.0	3600.0	second	☆
	Delay time of relay 2 from state change to actual output change.					
F1-22	DO1 Output Delay Time	0.0	0.0	3600.0	second	☆
	The delay time from the state change of the collector DO1 to the actual output change					
F1-23	DO2 Output Delay Time	0.0	0.0	3600.0	second	☆
	The delay time from the state change of the collector DO2 to the actual output change					
F1-24	AI 1 Gain	0	1.00	20.00	-	★
	Analog input AI1 signal gain multiple, maximum gain up to 20 times. For example, AI1 is used as the target frequency setting, F0-07 is set to "0:0-10V", and this parameter is set to 2.00; Then a 5V input signal can make the Inverter run at the maximum frequency.					
F1-25	AI 1 Offset	-10.00	0.00	10.00	V	★
	Analog input 1 signal offset value, the maximum offset can be +/-10V. For example, AI1 is set as the target frequency, F0-07 is set to "0:0-10V", and this parameter is set to 2.0; Then the 8V input signal can make the inverter run at the maximum frequency. When F0-07 is set to "1:0-20mA", 10.0V of this parameter indicates an offset of 20mA, and other values also correspond linearly. When F0-07 is set to "2:4-20mA", 10.0V of this parameter indicates the offset of 16mA, and the other values also correspond linearly. Internal calculated value of AI1 = actual input *F1-24+F1-25					
F1-26	AI 2 Gain	0	1.00	20.00	-	★
	Analog input 2 signal gain multiple, maximum gain up to 20 times.					
F1-27	AI 2 Offset	-10.0	0	10.0	V	★
	Analog input 2 signal offset value, maximum offset +/-10V.					
F1-28	AO1 Output Function Selection	0	0	6	-	☆
	0: Running frequency. 1: (Target) Set frequency. 2: Output current. 100% AO output signal corresponds to 2 times the rated current. 3: Output torque. 100% AO output signal corresponds to 2 times the rated torque. This value is the absolute value of torque. 4: Output power. 100% AO output signal corresponds to 2 times the rated power. 5: Output voltage. 100% AO output signal corresponds to 1.2 times the rated voltage. 6. Communication control. The AO output signal is controlled by Modbus RTU (RS485).					
F1-29	AO 2 Output Function Selection	0	1	6	-	☆
	Same as AO1					
F1-30	AO 1 Gain	0	1.00	20.00	-	☆
	Analog output 1 signal gain multiple, maximum gain up to 20 times.					

删除[Mayday Mayday]: 900

F1-31	AO 1 Offset	-10.00	0.00	10.00	V	☆
	Analog output 1 signal bias value, the maximum bias can be +/-10V.					
F1-32	AO 2 Gain	0	1.00	20.00	-	☆
	Analog output 2 signal gain multiple, maximum gain up to 20 times.					
F1-33	AO 2 Offset	-10.00	0.00	10.00	V	☆
	Analog output 2 signal bias value, maximum bias +/-10V.					
F1-34	DI delay time	0.000	0.010	1.000	s	☆

5.2.3 F2 Parameter Group - VF Curve

Parameter	Description	Minimum Value	Default Value	Maximum Value	Unit	Change Permission
F2-00	VF curve setting	0	0	4	-	★
	0: straight line v/f. 1: multipoint v/f. 2: square v/f. **3**：V/F separation **4**：Specific V/F separation Note: F2-00 ~F2-10 is only valid when F8-06 selects "V/F Control".					
F2-01	Multi-point VF Frequency Point 1	0.0	0.0	F2-03	Hz	★
F2-02	Multi-point VF Voltage Point 1	0	0	100.0	%	★
F2-03	Multi-point VF Frequency Point 2	F2-01	0	F2-05	Hz	★
F2-04	Multi-point VF Voltage Point 2	0	0	100.0	%	★
F2-05	Multi-point VF Frequency Point 3	F2-03	0	F2-07	Hz	★
F2-06	Multi-point VF Voltage Point 3	0	0	100.0	%	★
F2-07	Multi-point VF Frequency Point 4	F2-05	0	F2-09	Hz	★
F2-08	Multi-point VF Voltage Point 4	0	0	100.0	%	★
F2-09	Multi-point VF Frequency Point 5	F2-07	0	F0-09	Hz	★
F2-10	Multi-point VF Voltage Point 5	0	0.0	100.0	%	★
	F2-01~F2-10 parameters define five V/F curves. Voltage relationship: the voltage of each section can be set arbitrarily and can be assigned reasonably according to the load characteristics. Frequency relationship: the multi-point V/F curve of five-segment frequency > four-segment frequency > three-segment frequency > two-segment frequency > one-segment frequency. Multi-point VF should be set according to the load characteristics of the motor. When the low-frequency voltage is set too high, the motor may overheat or even burn out, and the inverter may be over-run or over-current protected.					
F2-11	VF Over-current Stall Action Current	50	150	200	%	★
F2-12	VF Over-current Stall Enable	0	1	1	-	★

删除[Mayday Mayday]: 900

	0: Disable 1: Enable					
F2-13	VF Over-current Stall Inhibition Gain	0	20	100	-	☆
F2-14	VF Multiple Over-current Stall Action Current Compensation Coefficient	50	50	200	-	★
	In high frequency area, the motor drive current is small, relative to the rated frequency, under the same stall current, motor speed drop is large, in order to improve the running characteristics of the motor, can reduce the rated frequency above stall current action, in some centrifuge such as running frequency is higher, need several times flux weakening and load the occasion of moment of inertia is larger, this method has good effect on acceleration.					
F2-15	VF Overexcitation Gain	0	64	200	-	☆
	In the process of inverter deceleration, over magnetizing control can restrain the rise of bus voltage and avoid overvoltage fault. The greater the over magnetizing gain, the stronger the inhibition effect. When the inverter is prone to overvoltage alarm during deceleration, it is necessary to increase the over magnetizing gain. However, the over magnetizing gain is too large, which easily leads to the increase of output current, so it needs to be weighed in application. When the inertia is small, there will be no voltage rise during motor deceleration, so it is recommended to set the over magnetizing gain to 0. To places that have requirements of braking resistor, also suggested that over magnetizing gain is set to 0.					
F2-16	VF Overvoltage Stall Action Voltage	200.0	Depend on model	2000.0	V	★
	VF overvoltage stall running voltage.					
F2-17	VF Overvoltage Stall Enable	0	1	1	-	★
	0: Disable 1: Enable					
F2-18	VF Overvoltage Stall Inhibition Frequency Gain	0	30	100	-	☆
	Increasing F2-18 will improve the control effect of DC bus voltage, but the output frequency will fluctuate. If the output frequency fluctuates greatly, F2-18 can be appropriately reduced.					
F2-19	VF Overvoltage Stall Inhibition Voltage Gain	0	30	100	-	☆
	Increasing F2-19 can reduce the overshoot of DC bus voltage.					
F2-20	Maximum Rising Limiting Frequency of Overpressure Stall	0	5	50	Hz	★
	Limit of maximum rising frequency of overvoltage inhibition.					
F2-21 ~ F2-23	**Reserved**					
F2-24	V/F oscillation suppression gain	0	40	100	-	☆

删除[Mayday Mayday]: 900

	The method for selecting the gain should be minimized under the premise of effectively suppressing oscillations to avoid adverse effects on VF operation. Choose a gain of 0 when there is no oscillation in the motor. Only when the motor exhibits obvious oscillations, should the gain be appropriately increased. The larger the gain, the more pronounced the suppression of oscillations.When using the oscillation suppression function, it is essential for the rated current and no-load current parameters of the motor to be accurate; otherwise, the VF oscillation suppression effect will be unsatisfactory.					
F2-25	Oscillation Suppression Gain Mode	0	3	4	-	★
F2-26	Voltage source for V/F separation	0	0	8	-	☆
	0: Set by F2-17 1: AI1 2: AI2 3: Reserved 4: Reserved 5: Multi-reference 6: Simple PLC 7: PID reference 8: Serial comms. 100.0% corresponds to the rated motor voltage (F8-01)					
F2-27	Digital setting of voltage for V/F separation	0	0	F8-01	V	☆
F2-28	Voltage rise and decline time of V/F separation	0.0	0.0	1000.0	s	☆
	The voltage rise time during VF separation refers to the time required for the output voltage to accelerate from 0 to the rated voltage of the motor. The voltage decline time during VF separation refers to the time required for the output voltage to decelerate from the rated voltage of the motor to 0.					
F2-29	Stop mode selection for V/F separation	0	0	1	-	★
	0: Frequency and voltage declining to 0 independently 1: Frequency declining after voltage declines to 0					

5.2.4 F3 Parameter Group – Start/Stop Process Control

Parameter	Description	Minimum Value	Default Value	Maximum Value	Unit	Change Permission
F3-00	Start Frequency	0.0	0.0	10.0	Hz	☆
	To ensure the motor torque at start, please set the appropriate start frequency.					
F3-01	Start Frequency Hold Time	0.0	0.0	100.0	second	★
	In order to fully establish the magnetic flux when the motor starts, it is necessary to keep the start frequency for a certain time.					
F3-02	Start DC Braking Current	0	0	100	%	★

删除[Mayday Mayday]: 900

	The greater the DC braking current, the greater the braking force. When set to 0, the inverter will still perform the braking process for F3-03. Set the time, but there is no braking force at this time. This parameter value corresponds to the rated current percentage.					
F3-03	Start DC Braking Time	0.0	0.0	100.0	second	★
	Duration of starting DC braking.					
F3-04	DC Braking Initial Frequency at Stop	0.0	0.0	F0-09	Hz	☆
	In the process of deceleration and stop, when the running frequency decreases to this frequency, the DC braking process begins.					
F3-05	DC Braking Waiting Time at Stop	0.0	0.0	100.0	second	☆
	After the running frequency is reduced to the starting frequency of stopping DC braking, the inverter stops outputting for a period of time before starting DC. Braking process. It is used to prevent overcurrent and other faults that may be caused when DC braking is started at a higher speed.					
F3-06	DC Braking Current at Stop	0	0	100	%	☆
	There are two situations of DC braking current relative to the basic value. 1. When the rated current of the motor is less than or equal to 80% of the rated current of the inverter, it is the base value of the percentage relative to the rated current of the motor. 2. When the rated current of the motor is greater than 80% of the rated current of the inverter, it is percentage relatively 80% inverter rated current to the base value.					
F3-07	DC Braking Time	0.0	0.0	100.0	second	☆
	The duration of DC braking. When this value is 0, the DC braking process is cancelled.					
F3-08	Acceleration and Deceleration Mode	0	0	1	-	★
	0: linear acceleration and deceleration. The output frequency increases or decreases in a straight line. 1: S curve acceleration and deceleration. When the target frequency is fixed, the output frequency increases or decreases according to the S curve.					
F3-09	S-curve Initial Time Proportion	0.0	30.0	100.0	%	★
	The proportion of time at the beginning of curve acceleration and deceleration, during which the slope of output frequency change gradually increases. It should satisfy with F3-10：F3-09+F3-10<100%。					
F3-10	S-curve End Time Proportion	0.0	30.0	100.0	%	★
	The proportion of the time at the end of the acceleration and deceleration of the S-curve, during which the slope of the output frequency change decreases gradually. In time between the beginning and the end, the inverter output frequency is increased or decreased according to the straight line.					
F3-11	Acceleration Time 2	0.1	Depends on model	6500.0	second	☆
F3-12	Deceleration Time 2	0.1	Depends	6500.0	second	☆

删除[Mayday Mayday]: 900

			on model			
F3-13	Acceleration & Deceleration Time 1-2 Switching Frequency Point	0.0	0.0	F0-09	Hz	☆
	It is used to select different acceleration and deceleration time according to the running frequency range, not through DI terminal.					
F3-14	Skip Frequency	0.0	0.0	F0-09	Hz	☆
	When the target frequency is set within the skip frequency range, the final running frequency of the inverter will avoid the range and run stably with the boundary value outside the range. It can be used to avoid the frequency resonance point of mechanical equipment. This parameter is the reference value of skip frequency, and the range is set by F3-15.					
F3-15	Skip Frequency Bandwidth	0.0	0.0	F0-09	Hz	☆
	Used in combination with F3-14, set specific skip frequency range (F3-14-F3-15) ~ (F3-14+ F3-15). After this range is enabled, the actual operating frequency of the inverter is a hysteresis curve: when the frequency rises from low to within the range, the frequency remains at the low frequency boundary; When the frequency decreases from high to within the range, the frequency remains at the high frequency boundary;					
F3-16	Forward/Reverse Dead Time	0.0	0.0	3000.0	second	☆
	Set the transition time at the output of 0Hz during the forward and reverse transitions of the inverter.					
F3-17	Reverse Control	Inversion control	Inversion control	Inversion control	Inversion control	Inversion control
	0: Reverse is allowed. 1: Reverse is prohibited.					
F3-18	Brake Unit Duty	0	50	100	%	☆
	It is used to adjust the duty cycle of the braking unit. If the braking utilization rate is high, the braking unit has a high duty cycle and strong braking effect. However, the bus voltage of the inverter fluctuates greatly in the braking process. When set to 0, brake unit is not enabled.					
F3-19	Brake Unit Action Voltage	200.0	Depends on model	1000.0	V	☆
	Built-in starting voltage of braking unit action, after the bus voltage is higher than this voltage, the braking unit will start to act.					
F3-20	Speed Tracking Mode	0	1	2	-	★
	0: Start with the shutdown frequency. Tracking down from the frequency when the power is off. 1: Start from the preset frequency. Track upward from the preset frequency and use it when the power is cut off for a long time and then restarted. 2: Start with the maximum frequency. Tracking down from the maximum frequency, generally used by generating loads.					
F3-21	Speed Tracking	1	50	100	-	☆
	When speed tracking starts, set the speed of speed tracking. The larger the parameter is, the faster the tracking speed is. However, if the parameter is too large, the tracking effect					

删除[Mayday Mayday]: 900

	may be unreliable.					
F3-22	Speed Tracking Current Loop Kp	0	Depends on model	1000	-	☆
	F3-22-F3-26 parameters need not be set by users.					
F3-23	Speed Tracking Current Loop ki	0	Depends on model	1000	-	☆
F3-24	Speed Tracking Current Value	5	Depends on model	200	%	☆
F3-25	Speed Tracking Current Lower Limit	5	30	100	%	★
F3-26	Speed Tracking Voltage Rising Time	0.5	1.1	3.0	second	★
F3-27	Demagnetizing Time	0.00	1.00	5.00	second	★
	The demagnetizing time is the minimum interval between stop and start-up, and this function will take effect only after the speed tracking function is turned on. If the setting value is too small, it is easy to cause overvoltage fault.					

5.2.5 F4 Parameter Group – Multi-segment Command

Parameter	Description	Minimum Value	Default Value	Maximum Value	Unit	Change Permission
F4-00	Multi-segment Command 0 Frequency Source	0	0	6	-	☆
	0: Digital setting (F4-01) 1: Preset frequency 2: Panel potentiometer 3: AI1 4: AI2 5: PID 6: Reserved					
F4-01	Multi-segment Command 0 Frequency	-F0-09	0.0	F0-09	Hz	☆
F4-02	Multi-segment Command 1 Frequency	-F0-09	0.0	F0-09	Hz	☆
F4-03	Multi-segment Command 2 Frequency	-F0-09	0.0	F0-09	Hz	☆
F4-04	Multi-segment Command 3 Frequency	-F0-09	0.0	F0-09	Hz	☆
F4-05	Multi-segment Command 4 Frequency	-F0-09	0.0	F0-09	Hz	☆
F4-06	Multi-segment Command 5 Frequency	-F0-09	0.0	F0-09	Hz	☆
F4-07	Multi-segment Command 6 Frequency	-F0-09	0.0	F0-09	Hz	☆
F4-08	Multi-segment Command 7	-F0-09	0.0	F0-09	Hz	☆

删除[Mayday Mayday]: 900

	Frequency					
	Multi-segment command can be used in three occasions: as frequency source, as voltage source of VF separation, and as setting source of process PID. In three applications, the dimension of multi-segment command is relative value, ranging from-100.0% to 100.0%, which is the percentage of relative maximum frequency when used as frequency source; When used as VF separation voltage source, is the percentage relative to the rated voltage of the motor; Since PID setting is originally relative value, multi-segment command as PID setting source does not require dimensional conversion.					
F4-09	PLC Running Mode	0	0	2	-	☆
	0：Stop at the end of a single running. 1：The final value is maintained at the end of a single running 2：Keep circulating					
F4-10	PLC Power Off Memory Selection	00	00	11	-	☆
	Bit: power-down memory selection 0: Don't remember when power is off. 1: Power-off memory Ten Bit: Stop memory selection 0: Don't remember when power is off. 1. Power-off memory					
F4-11	PLC Running Time Unit	0	0	1	-	☆
	0：s(second) 1：h(hours)					
F4-12	PLC Segment 0 Running Time	0	0	6500.0	s(h)	☆
F4-13	PLC Segment 0 Acceleration & Deceleration time selection	0	0	1	-	☆
	0: Acceleration and deceleration time 1 1: Acceleration and deceleration time 2					
F4-14	PLC Segment 1 Running Time	0	0	6500.0	s(h)	☆
F4-15	PLC Segment 1 Acceleration & Deceleration Time Selection	0	0	1	-	☆
	Same as F4-13					
F4-16	PLC Segment 2 Running Time	0	0	6500.0	s(h)	☆
F4-17	PLC Segment 2 Acceleration & Deceleration Time Selection	0	0	1	-	☆
	Same as F4-13					
F4-18	PLC Segment 3 Running	0	0	6500.0	s(h)	☆

删除[Mayday Mayday]: 900

	Time					
F4-19	PLC Segment 3 Acceleration & Deceleration Time Selection	0	0	1	-	☆
	Same as F4-13					
F4-20	PLC Segment 4 Running Time	0	0	6500.0	s(h)	☆
F4-21	PLC Segment 4 Acceleration & Deceleration Time Selection	0	0	1	-	☆
	Same as F4-13					
F4-22	PLC segment 5 Running Time	0	0	6500.0	s(h)	☆
F4-23	PLC segment 5 Acceleration & Deceleration Time Selection	0	0	1	-	☆
	Same as F4-13					
F4-24	PLC segment 6 Running Time	0	0	6500.0	s(h)	☆
F4-25	PLC segment 6 Acceleration & Deceleration Time Selection	0	0	1	-	☆
	Same as F4-13					
F4-26	PLC segment 7 Running Time	0	0	6500.0	s(h)	☆
F4-27	PLC segment 7 Acceleration & Deceleration Time Selection	0	0	1	-	☆
	Same as F4-13					

5.2.6 F5 Parameter Group – PID & Constant Pressure Water Supply Parameters

Parameter	Description	Minimum Value	Default Value	Maximum Value	Unit	Change Permission
F5-00	PID Reference Source	0	0	4	-	☆
	This parameter is used to select the target quantity given channel during PID control. **0: F5-01 setting 1：AI1 2：AI2** **3: Panel potentiometer 4: Communication** No matter which channel, the set target quantity is a relative value, and the set range is 0.0%~100.0%.					
F5-01	PID Reference Value (Actual Pressure)	0.1	3.5	1000.0	Bar	☆
	Through the value of this parameter, a given amount of PID control is set.					

删除[Mayday Mayday]: 900

F5-02	PID Feedback Source	0	0	4	-	☆
	0:AI1 1. AI2 2. Communication **3: DC bus voltage 4: Temperature** This parameter is used to select the feedback quantity in PID control. For a given channel, the feedback quantity is relative as the given quantity.					
F5-03	PID Direction	0	0	1	-	☆
	0: Positive effect. When the feedback signal of PID is less than a given amount, the output frequency of the inverter increases. 1: Negative effect. When the feedback signal of PID is less than a given amount, the output frequency of inverter decreases. The function of PID control is to make the given quantity and the feedback quantity the same. Through this parameter, you can set the running trend of the inverter when there is a difference between the given quantity and the feedback quantity.					
F5-04	Acceleration PID Proportional Gain Kp	0.0	20.0	6500.0	-	☆
	The proportional gain of PID controller determines the adjustment strength of the whole PID controller. The greater Kp, the greater the adjustment strength. If the value is high, even if the difference between the given and the feedback is small, the transducer can respond quickly, and the output frequency can vary greatly. But too high a value can cause instability.					
F5-05	Acceleration PID Integral Time Ki	0.01	0.80	10.00	second	☆
	The integral time of PID controller determines the integral adjustment intensity of PID controller. The shorter the integral time, the greater the adjustment intensity. If this parameter is set too small, the system may shock easily.					
F5-06	Deceleration PID Proportional Gain Kp	0.0	200.0	6500.0	-	☆
	Same as F5-04					
F5-07	Deceleration PID Integral Time Ki	0.01	0.01	10.00	second	☆
	Same as F5-05					
F5-08	Sensor Type	0	0	3	-	☆
	0：0~10V 1：4~20mA 2：0~5V 3：0.5V~4.5V					
F5-09	Sensor Range	0.0	16.0	25.0	Bar	☆
	The maximum pressure measuring range of the sensor, the sensor nameplate or dial are marked.					
F5-10	Sensor Zero Correction	-10.0	0.0	10.0	Bar	☆
	This parameter is set when there is no pressure in the pipeline and pressure is fed back by the inverter.					
F5-11	Sensor Full-scale Correction	-10.0	0.0	10.0	Bar	☆

删除[Mayday Mayday]: 900

	This parameter is set when the pressure displayed on the pressure gauge is inconsistent with the feedback pressure after the pipeline is pressurized.					
F5-12	Sleep Frequency	0	20.0	F0-09	Hz	☆
	When the inverter detects that the feedback pressure reaches the target value, the frequency will be reduced to this parameter value, and the inverter will sleep and stop.					
F5-13	Sleep Delay Time	0.0	0.0	1200.0	second	☆
	During the running of the inverter, when the set frequency is less than f5-12 sleep frequency, after the F5-13 sleep delay time, the inverter enters the sleep state and automatically stops.					
F5-14	Sleep Pressure Offset	0	8	100	%	☆
	Percentage relative to target pressure.					
F5-15	Frequency Step of Sleep Deceleration	0.0	3.0	F0-09	Hz	☆
	Effective at constant or critical pressure.					
F5-16	Sleep Deceleration Time Delay	60.0	60.0	600.0	second	☆
	Note: f5-14 ~ f5-16 is effective when the pressure fluctuation is small.					
F5-17	Wake Up Pressure	0	80	100	%	☆
	Wake up pressure value, relative to feedback pressure; For example, set it to 80%, the feedback pressure is 10 bar, and the pressure wake-up is 8 bar.					
F5-18	Pressure Upper Limit	0	200	300	%	☆
	The percentage of the target pressure, exceeding this pressure, an overpressure fault err53 is reported.					
F5-19	Water Shortage Detection Time	0.0	0.0	1200.0	second	☆
	It takes time from water pump water shortage to alarm detection. When set to 0.0, disable the water shortage protection function.					
F5-20	Water Shortage Detection Frequency	0	45.0	F0-09	Hz	☆
	When the frequency reaches the set value, the current is lower than the set value of F5-21 or the pressure is lower than the set value of F5-22, Err52 water shortage fault is reported.					
F5-21	Water Shortage Detection Current	0	0	200	%	☆
	Percentage of motor rated current. When the current is lower than this value, it is reported that err52 is short of water. When set to non 0, the water shortage function is enabled.					
F5-22	Water Shortage Detection Pressure	0	20	100	%	☆
	Percentage of target pressure. When the pressure is lower than this, it is reported that err52 is short of water.					
F5-23	Water Shortage Restart Time	1	20	2000	Min	☆
	The inverter will restart automatically after this time.					
F5-24	Water Shortage Auto Restart Pressure	0	50	100	%	☆

删除[Mayday Mayday]: 900

	Percentage of target pressure.					
F5-25	Antifreeze Function	0	0	1	-	☆
	0: Disable 1：enable					
F5-26	Antifreeze Running Frequency	2.0	10.0	F0-09	Hz	☆
	When F5-25 is set to 1, the antifreeze function takes effect, and the inverter runs at this frequency.					
F5-27	Antifreeze Running Time	60.0	60.0	3600.0	second	☆
	The time of single running when the inverter is enabled with anti-freezing function.					
F5-28	Anti-freezing running period	0	30	1440	Min	☆
	Running period of inverter when antifreeze function is enabled.					
F5-29	Auto start enable	0	0	1	-	☆
	0：Forbidden 1：Enabled					
F5-30	Auto start delay time (only Water supply mode)	0	10	120	s	☆
	When F5-29 was set 1, after a delay time of F5-30 when powered on, the inverter will automatically start.					
F5-31	Reserved					
F5-32	Multi-pump network mode	0	0	2	-	☆
	0：Multi-pump master and slave control When the pressure is not enough, start the slave pump in turn 1：Multi-pump synchronous control When the pressure is not enough, slave pump runs at the same frequency 2：Multi-pump one for use, one for standby control Only one pump is running at any time, and other pumps are used as stand-by for each other					
F5-33	Standby master running mode	0	0	2	-	☆
	0：Stop 1：Constant speed 2：Constant pressure(Slave 1 must have sensors)					
F5-34	Standby master mode 1 running frequency	F0-10	F8-03	F0-09	Hz	☆
F5-35	Alternating pump switching period	0	0	168	h	☆
	0:Will not replace pump 201:Only for debugging, it takes 3 minutes to replace the pump. After debugging, you need to set other values. When set this value greater than 0, change waiting time.					
F5-36	Adding pump pressure	0	0.3	2.0	Bar	☆
F5-37	Adding pump frequency	F0-10	49	F0-09	Hz	☆
F5-38	Under-pressure adding pump time	1.0	2.0	3600.0	s	☆

删除[Mayday Mayday]: 900

F5-39	Reducing pump frequency	F0-10	30.0	F0-09	Hz	☆
F5-40	Over-pressure reducing pump time	1.0	2.0	3600.0	s	☆
F5-41	PID feedback loss detection value	0.0	0.0	100.0	-	☆
F5-42	Burst pipe pressure	0	50	100	%	☆
F5-43	Burst pipe judging time	0.0	0.0	600.0	s	☆
	Turns off when set to 0.0					
F5-44	Reserved					
F5-45	Maximum number of pumps running at the same time	0	1	5	-	☆
F5-46	Standby master and slave quantity	0	1	3	-	☆
F5-47	Secondary target pressure setting	0.1	3.5	1000.0	Bar	☆
	While supplying water, when the DI terminal function is set to 34, the secondary target pressure is valid					
F5-48	Adding pump switching delay	0.1	0.2	3600.0	s	☆
F5-49	Grid power and inverter switching delay	0.1	0.5	3600.0	s	☆

5.2.7 F6 Parameter Group – Extend Parameter

Parameter	Description	Minimum Value	Default Value	Maximum Value	Unit	Change Permission
F6-00	Main Menu Display Auto Switching	0	1	1	-	☆
	0: Switching is prohibited. When the display is switched from the frequency interface to other interfaces, it is forbidden to automatically switch back to the frequency interface. 1: Automatic switching. When the display is switched from the frequency interface to other interfaces, it will automatically switch back to the frequency interface after 10 seconds.					
F6-01	Parameter Modification Attribute	0	0	1	-	☆
	0: Allow modification. 1. No modification is allowed. When this parameter is set to 1, the inverter is forbidden to modify the parameter, and it must be set to 0 before it can be changed.					
F6-02	LED2 Display Data Selection(Double Display Reserved Parameters)	0	2	12	-	☆
	0: Running Frequency 1: Running Speed					

删除[Mayday Mayday]: 900

	2: Output Current 3: DC Bus Voltage 4: Output Voltage 5: Output Power 6: PID Feedback 7: Power frequency pump current 8：AI1 Voltage 9：Motor Temperature Value 10：heatsink temperature 11：Actual Switching Frequency 12：Actual Running Speed					
F6-03	User Password	0	0	65535	-	★
	The inverter provides the user password protection function. When F6-03 is SET to non-zero, it is the user password. The password protection will take effect after exiting the function code editing state. Press the SET key again, "-------" will be displayed. You must input the user password correctly to enter the parameter interface.					
F6-04	Set Inverter Power on Time	0	0	17520	hour	☆
	After the accumulated power-on time of the inverter exceeds this value, the inverter reports a fault Err20. The function of this parameter is invalid when it is set to 0.					
F6-05	Set Inverter Running Time	0.0	0.0	6500.0	min	☆
	When the frequency converter starts, it will start timing. When the running time reaches this value, the frequency converter will stop automatically. This parameter is invalid when the value is set to 0.					
F6-06	Switching Frequency Adjusting with Temperature	0	1	1	-	☆
	When the inverter detects that the radiator temperature is high, it automatically reduces the switching frequency to reduce the temperature rise of the inverter. When the radiator temperature is low, the switching frequency gradually returns to the set value. This parameter is disabled when the value is set to 0.					
F6-07	Switching Frequency Adjusting Start Temperature	0	63	150	℃	☆
	When the inverter detects that the radiator temperature exceeds the set value of this parameter, F6-06 function is effective, and the switching frequency is adjusted with the temperature.					
F6-08	Switching Frequency Adjusting Time	0.1	20.0	50.0	s	☆
	When the inverter detects that the heat sink temperature exceeds the set value of F6-07, the switching frequency starts to adjust after the set time of F6-08.					
F6-09	DPWM Switching Frequency	5.0	F8-03	F0-09	Hz	☆
	This parameter is valid only for VF control. When the asynchronous VF is running, the wave sending mode is 7-segment continuous modulation mode below this value, and on the contrary, it is 5-segment intermittent modulation mode. For 7-segment continuous modulation, the switch loss of an inverter is large, but the					

删除[Mayday Mayday]: 900

	current ripple is small; The switching loss is small, and the current ripple is large in the 5 - segment discontinuous modulation mode. However, it may lead to instability of motor operation at high frequency, and generally does not need to be modified.					
F6-10	Excessive Speed Deviation Detection Value	0.0	30.0	100.0	%	☆
F6-11	Excessive Speed Deviation Detection Time	0.0	5.0	60.0	s	☆
	This function is only valid when there is vector control of speed sensor. When this parameter is 0.0s, the detection of excessive speed deviation will be cancelled.					
F6-12	Motor Overload Protection Gain	0.20	1.00	10.00	-	☆
	Used to adjust the gain multiple of the set value of overload current in the inverter. Note: Increasing this parameter means increasing the overload current, so improper setting may burn out the motor.					
F6-13	External Temperature Sensor Type	0	0	3	-	☆
	0: Disable. 1: PT100 2: PT1000 3: 5k NTC resistance					
F6-14	Overtemperature Protection Threshold	0	200	200	℃	☆
	When the temperature of the external sensor exceeds the protection threshold, the inverter will give an alarm.					
F6-15	Start Protection Selection	0	0	1	-	☆
	If the parameter is set to 1, the inverter will not respond to the running command if the running command is valid when the inverter is powered on or after a fault is reset. The running command must be removed once before the inverter responds to the running command.					
F6-16	Fault Enable Selection 1	00000	01111	11111	-	☆
	0: Protection is prohibited. 1: Enable protection Bit: Relay closing fault Ten bits: Output open-phase protection. Hundred bits: Input open-phase protection. Thousand bit: Power-on short-circuit protection to ground. Ten thousand bits: output detection before operation (including grounding and phase loss)					
F6-17	Fault Enable Selection 2	00000	00001	11111	-	☆
	0: Protection is Prohibited. 1: Enable protection Bit: Motor overload protection selection Ten bits: AI input lower limit protection selection Hundred bits: Reserved Thousand bits: Reserved Ten thousand bits: Reserved					
F6-18	Fault Auto Reset Times	0	0	20	time	☆
	Inverter can automatically reset after fault alarm. After this number is exceeded, the					

删除[Mayday Mayday]: 900

	inverter will remain in a fault state. When set to 0, the automatic reset function is not enabled.					
F6-19	Fault Auto Reset Interval Time	0.1	1.0	100.0	second	☆
	The waiting time from the inverter fault alarm to the automatic fault reset.					
F6-20	Drop load protection selection	0	0	1	-	☆
	0：Invalid 1：Valid When the parameter is set to 1, the output current of the inverter is less than F6-21 and the duration is greater than F6-22, and the output frequency is automatically reduced to 7% of the rated frequency. If the load recovers, the system continues to run at the preset frequency.					
F6-21	Drop load detection level	0.0	10.0	100.0	%	☆
F6-22	Drop load detection time	0.0	1.0	60.0	s	☆
F6-23	Voltage sag function selection	0	0	2	-	★
	0：Invalid 1： Deceleration. When the voltage of the inverter decreases suddenly (including but not limited to instantaneous power failure), the inverter decelerates. When the line voltage returns to normal and the duration exceeds F6-25, the inverter accelerates to the original set frequency normally. 2： Ramp to stop. When the voltage of the inverter decreases suddenly (including but not limited to instantaneous power failure), the inverter ramps to stop. When the voltage of the inverter decreases suddenly (including but not limited to instantaneous power failure), and when the busbar voltage drops below F6-26, the inverter reduces the output frequency, so that the motor is in the state of generating power. This function can make the electric energy that feeds back to the busbar voltage maintain the busbar voltage at about F6-26, so that the system can normally decelerate to 0Hz. When the bus voltage returns to F6-24 and the duration exceeds F6-25, the inverter accelerates to the original setting frequency normally.					
F6-24	Voltage sag judging voltage	80	85	100	%	★
F6-25	Voltage sag recovery judging time	0.0	0.5	100.0	s	★
F6-26	Voltage sag action judging voltage	60	80	100	%	☆
F6-27	Voltage sag gain Kp	0	40	100	-	☆
F6-28	Voltage sag integral coefficient Ki	0	30	100	-	☆
F6-29	Voltage sag action deceleration time	0.0	20.0	300.0	s	★

5.2.8 F7 Parameter Group – Communication Parameters

Parameter	Description	Minimum Value	Default Value	Maximum Value	Unit	Change Permission
F7-00	Inverter Address	1	1	249	-	☆
	The local address when using the communication function of the inverter. When this value is set to 0, it is the broadcast address, which realizes the broadcast function of the upper computer.					
F7-01	Baud Rate	0	0	4	-	☆
	0：9600bps　1：19200bps　2：38400bps 3：57600bps　4：115200bps					

F7-02	Data Format	0	3	3	-	☆
	0: No check -2 stop bits (8-N-2) 1: Even check -1 stop bit (8-E-1) 2: Odd check -1 stop bit (8-O-1) 3: No check -1 stop bit (8-N-1)					
F7-03	Communication Timeout	0.0	0.0	60.0	second	☆
	When this parameter is set to 0.0 second, no communication timeout detection is performed. When this parameter is set to more than 0.1 second, if the interval between one communication and the next communication exceeds the communication timeout, the inverter will report a communication failure (Err16).					
F7-04	Master and slave control valid	0	0	2	-	★
	0：Copy keyboard 1：Inverter synchronous mode cascade 2：Water supply network (For RV900M, this parameter is MODBUS data communication format, see F7-19)					
F7-05	Master and slave selection	0	0	1	-	★
	0：Master 1：Slave					
F7-06	Number of slaves	0	1	4	-	☆
F7-07	Slave follows master command	000	11	111	-	★
	Bit: Slave follows command Ten bits: Slave fault information transmission Hundred bits: Master displays the slave is disconnected 0：Disable 1：Enabled					
F7-08	Slave data reception	0	0	1	-	☆
	0：Running frequency 1：Target frequency					
F7-09	Master and slave communication timeout time	0.0	1.0	10.0	s	☆
	This parameter is used to set communication outage time of master and slave, only valid for master. Does not take effect when it is set to 0.					
F7-10	Master and slave control communication transmission period	0.001	0.001	10.000	s	☆
	This parameter is valid only for master, setting the data transmission period of master during master and slave communication.					
F7-11	Torque reception data offset	-100.0	0.00	100.00	%	☆
F7-12	Torque reception data gain	-10.00	1.00	10.00	-	☆
	F7-11, F7-12: correct received torque data. If the offset is represented by b, the gain is represented by k, the data received by the slave is represented by x, and the actual data used is represented by y. Then y = kx + b, that is, actual torque usage data=F7-12*received data+F7-11.					
F7-13	Frequency reception data offset	-100.0	0.00	100.00	%	☆

删除[Mayday Mayday]: 900

删除[Mayday Mayday]: 900

删除[Mayday Mayday]: 900

F7-14	Frequency reception data gain	-10.00	1.00	10.00	-	☆
	F7-13, F7-14: correct received frequency data. If the offset is represented by b, the gain is represented by k, the data received by the slave is represented by x, and the actual data used is represented by y. Then y = kx + b, that is, actual frequency usage data=F7-14*received data+F7-13.					
F7-15	Slave frequency forward maximum deviation	0.00	10.00	100.00	%	☆
	Set to 0.00%, this function is invalid.					
F7-16	Slave frequency reverse maximum deviation	0.20	0.50	10.00	Hz	☆
	If this parameter is set for master and slave control, the speed of the master and slave can be synchronized within the deviation range.					
F7-17	Droop control	0.00	0.00	10.00	Hz	☆
	This function is generally used for load distribution when multiple motors drive the same load. This parameter refers to the frequency drop of the inverter when it outputs the rated load.					
F7-18	Reserved					
F7-19	MODBUS data communication format	0	0	1	-	☆
	0：Standard MODBUS 1：Nonstandard MODBUS protocol					
F7-20	Enable old inverter Modbus	0	0	1	-	☆
	0：Disable 1：Enable					

5.2.9 F8 Parameter Group – Motor Control Mode

Parameter	Description	Minimum Value	Default Value	Maximum Value	Unit	Change Permission
F8-00	Motor Rated Power	0.1	Depends on model	1000.0	Kw	★
	This parameter is set to the rated power of the motor (nameplate).					
F8-01	Motor Rated Voltage	1	Depends on model	500	V	★
	This parameter is set to the rated voltage of the motor (nameplate).					
F8-02	Motor Rated Current	0.01	Depends on model	655.35	A	★
	This parameter is set to the rated current of the motor (nameplate).					
F8-03	Motor Rated Frequency	0	50.0	500.0	Hz	★
	This parameter is set to the rated frequency of the motor (nameplate).					
F8-04	Motor Rated Speed	1	1460	65535	Rpm	★
	This parameter is set to the rated speed of the motor (nameplate).					
F8-05	Back EMF Coefficient for	0	Depends	6553.5	V	★

删除[Mayday Mayday]: 900

	PM Motor		on model			
	This parameter is set as the back EMF coefficient of synchronous machine.					
F8-06	Motor Control Mode	0	0	2	-	★
	0: V/F control. 1: Vector speed control (IMSVC) of asynchronous motor. F8-07 parameter identification is required after SVC control is selected. 2: Vector speed control (FMSVC) of synchronous motor. F8-07 parameter identification is required after SVC control is selected.					
F8-07	Motor Parameter Autotune	0	0	3	-	★
	0: No operation. 1: Static parameter identification. If the motor can't be completely separated from the load and can't rotate freely, please choose static parameter identification. 2: Dynamic parameter identification. If the motor is completely disconnected from the load and can rotate freely, please choose dynamic parameter identification. Note: After restoring the factory setting value, changing the model or setting the motor power and voltage level, it is necessary to identify the parameters again so that the vector control can run best.					
F8-08	Speed/Torque Control Selection	0	0	1	-	★
	0: Speed control 1. Torque control It is used to select the inverter control mode: speed control or torque control, and the torque control only works in vector mode.					
F8-09	Torque Setting Source Selection	0	0	7	-	★
	0: Parameter setting (F8-10) 1: Panel potentiometer setting 2：AI1 3: AI2 4: Communication 5: The minimum of AI1 and AI2 6: The maximum of AI1 and AI2 7: Reserved Choose the torque setting source. There are seven torque setting methods.					
F8-10	Torque Setting Value	-200.0	120.0	+200.0	%	☆
	Torque value when F8-09 torque setting source is selected as 0.					
F8-11	Asynchronous Motor Stator Resistance	0.001	Depends on model	65.535	Ω	★
F8-12	Asynchronous Motor Rotor Resistance	0.001	Depends on model	65.535	KW	★
F8-13	Asynchronous Motor Leakage Inductance	0.01	Depends on model	655.35	mH	★
F8-14	Asynchronous Motor Mutual Inductance	0.1	Depends on model	6553.5	mH	★
F8-15	Asynchronous Motor Magnetizing Current	0.01	Depends on model	F8-02	A	★
	F8-11~F8-15 are asynchronous motor parameters, these parameters are generally not on the motor nameplate, need to be obtained by motor parameter identification F8-07. If the induction motor cannot be tuned on site, you can input the above parameters according					

删除[Mayday Mayday]: 900

	to the parameters provided by the motor manufacturer.					
F8-16	Synchronous Motor Stator Resistance	0.001	Depends on model	65.535	Ω	★
F8-17	Synchronous Motor D-axis Inductance	0.01	Depends on model	655.35	mH	★
F8-18	Synchronous Motor Q-axis Inductance	0.01	Depends on model	655.35	mH	★
	F8-16~F8-18 are synchronous motor parameters. Some synchronous motor nameplates will provide some parameters, but most of the motor nameplates do not provide the above parameters. These parameters must be obtained through parameter identification and must be identified in synchronous motor vector control mode.					

5.2.10 F9 Parameter Group – Motor Control Advanced Parameter

Parameter	Description	Minimum Value	Default Value	Maximum Value	Unit	Change Permission
F9-00	High Speed Area Switching Frequency	F9-03	10.0	F8-03	Hz	☆
	When the running frequency is greater than this value, the speed loop PID parameter is selected as the speed loop parameter in the high-speed segment. Running frequency between high speed and low speed, the speed loop PID parameter linear transformation of two sets of PID parameters.					
F9-01	High Speed Area Proportional Gain	1	20	100	-	☆
	Setting the proportional coefficient of the speed regulator can adjust the speed dynamic response characteristics of vector control. Increasing the proportional gain can speed up the dynamic response of the speed loop, but excessive proportional gain may make the system oscillate. Note: The parameters of high-speed area and low-speed area are only valid when F8-06 selects vector control.					
F9-02	High Speed Area Integral Time Constant	0.01	1.00	10.00	second	☆
	The speed dynamic response characteristic of vector control can be adjusted by setting the integral time of the speed regulator. Shortening the integral time can accelerate the dynamic response of the speed loop, but too short integral time may make the system oscillate.					
F9-03	Low Speed Area Switching Frequency	0.0	5.0	F9-00	Hz	☆
	When the operating frequency is less than this value, F9-04 and F9-05 are selected as PID parameters of speed loop.					
F9-04	Low Speed Area Proportional Gain	1	30	100	-	☆
	The inverter runs at different frequencies and can select different speed loop PID parameters. When the running frequency is less than the switching frequency of the low-speed segment F9-03, the proportional gain of the speed loop is used.					

删除[Mayday Mayday]: 900

F9-05	Low Speed Area Integral Time Constant	0.01	0.50	10.00	second	☆
	When the operating frequency is less than the switching frequency F9-03 in the low-speed section, the value of this parameter is used for the speed loop integral time.					
F9-06	Speed Loop Filter Time Constant	0.000	0.200	1.000	second	☆
	This parameter generally does not need to be adjusted, and the filtering time can be appropriately increased when the speed fluctuation is large. If the motor oscillates, the parameter should be appropriately reduced. The speed loop filter time constant is small, and the output torque of a inverter may fluctuate greatly， but the response speed is fast.					
F9-07	Slip Compensation Coefficient	50	100	200	%	☆
	For speed sensorless vector control, this parameter is used to adjust the steady speed accuracy of the motor: when the motor has a low speed, increase this parameter, and vice versa. With vector control of speed sensor, this parameter can adjust the output current of down-converter with the same load.					
F9-08	Maximum Output Voltage Coefficient	100	105	110	%	★
	The maximum output voltage of inverter can be increased. Increasing F9-08 can improve the maximum load capacity of fan weak magnetic area, but the increase of motor current ripple will aggravate the motor heat. On the contrary, the maximum load capacity of motor weak magnetic area will decrease, but the ripple of motor current will reduce the motor heat. Generally, no adjustment is required.					
F9-09	Torque Control Forward Maximum Frequency	0.0	50.0	F0-09	Hz	☆
F9-10	Torque Control Reverse Maximum Frequency	0.0	50.0	F0-09	Hz	☆
	Used to set the forward or reverse maximum operating frequency of inverter under torque control mode. When the inverter in torque control mode, if the load torque is less than the output torque of the motor, the motor speed will keep rising. In order to prevent accidents such as coasting in the mechanical system, the maximum motor speed during torque control must be limited. If it is necessary to change the maximum torque control frequency dynamically, the upper limit frequency can be controlled.					
F9-11	Torque Acceleration Time	0.0	0.0	6500.0	second	☆
F9-12	Torque Deceleration Time	0.0	0.0	6500.0	second	☆
	Under the torque control mode, the difference between the output torque of the motor and the load torque determines the speed change rate of the motor and the load. Therefore, the motor speed may change rapidly, resulting in noise or excessive mechanical stress. By setting the torque control acceleration and deceleration time, the motor speed can be changed smoothly. In the torque control of small torque start, it is not recommended to set the torque acceleration and deceleration time; If the torque acceleration and deceleration time is					

删除[Mayday Mayday]: 900

	set, it is suggested to increase the speed filter coefficient appropriately. When the torque needs to respond quickly, set the torque control acceleration and deceleration time to 0.00s.					
F9-13	M-axis Current Loop Kp	0	2000	30000	-	☆
F9-14	M-axis Current Loop Ki	0	1000	30000	-	☆
F9-15	T-axis Current Loop Kp	0	2000	30000	-	☆
F9-16	T-axis Current Loop Ki	0	1000	30000	-	☆
	F9-13-F9-16 is the current loop PID adjustment parameter, which will be automatically obtained after tuning, and generally does not need to be modified.					
F9-17	Synchronous Motor Flux Weakening Mode	0	1	2	-	☆
	0: Disable. The motor is not subject to flux-weakening control. At this time, the maximum speed of the motor is related to the bus voltage of the inverter. There is no flux-weakening current, and the output current is small, but the running frequency may not reach the set frequency. If you want to achieve a higher speed, you need to turn on the flux-weakening function. 1: Automatic adjustment. It is automatically adjusted by the inverter, and the higher the speed after entering the field weakening area, the greater the field weakening current. 2: Calculation + Automatic Adjustment. Combined with automatic adjustment, the speed of flux weakening current adjustment is faster, and this mode can be set when automatic adjustment can't meet the demand, but this mode depends on the accuracy of motor parameters.					
F9-18	Synchronous Motor Flux Weakening Coefficient	0	05	50	-	☆
	In the direct calculation mode, the required demagnetizing current can be calculated according to the target speed, and the size of demagnetizing current can be manually adjusted through F9-18. The smaller the demagnetizing current is, the smaller the total output current will be, but the desired flux weakening effect may not be achieved.					
F9-19	Flux Weakening Integral Multiple	02	02	10	-	☆
	Changing this parameter can change the adjustment speed of the flux weakening current. However, faster adjustment of the flux weakening current may lead to instability. Therefore, you do not need to manually change this parameter.					
F9-20	Reserved					
F9-21	Maximum Torque Ratio Current Enable	0	0	1	-	☆
	0: Disable 1: Enabled					
F9-22	Salient Rate Gain Coefficient	50	100	500	-	☆
	Related to the structure of synchronous motor, according to the different characteristics of the motor to set different salient pole rate gain coefficient, generally no need to set.					
F9-23	Starting Switching Frequency	1.0	3.0	F0-13	KHz	☆
	The size of the carrier frequency at startup.					

删除[Mayday Mayday]: 900

F9-24	SVC Low Speed Switching Frequency	1.0	4.0	F0-13	KHz	☆
	In SVC mode, the switching frequency of synchronous motor running at low speed.					
F9-25	Low Speed Switching Frequency Switch Frequency	5.0	20.0	F8-03	Hz	☆
	At low speed, the switching frequency is the set value of F9-23. After running the set value of this parameter, the switching frequency changes to the set value of F0-13.					
F9-26	Low Speed Maximum Magnetizing Current	0	20	80	%	☆
	Set the maximum excitation current of synchronous motor at low speed.					
F9-27	Low Speed Magnetizing Current Switching Frequency	0	20.0	F8-03	Hz	☆
	The maximum magnetizing current of synchronous motor at low speed is set at F9-26. After reaching this frequency, it will switch to normal current size. The default value of this parameter will change with the upper frequency (F0-09) and the rated frequency of the motor (F8-03).					
F9-28	Low Speed Magnetizing Current Switching Frequency Bandwidth	0.0	5.0	F8-03	Hz	☆
	When the synchronous motor runs at low speed, when the frequency reaches the set value of F9-27, if the current changes within the set range of F9-28, the low-speed magnetizing current is switched only once.					
F9-29	Synchronous Motor Initial Position Detection Mode	0	1	1	-	☆
	0: Check before each run. 1: No detection					
F9-30	Synchronous Motor Initial Position Identification Current Initial Value	30	120	180	%	★
F9-31	Synchronous Motor Initial Position Compensation Angle	0.0	0.0	359.9	°	☆
F9-32	Synchronous Motor Inductance Detection Current	30	80	120	%	☆
F9-33	Synchronous Motor Back EMF Identification Initial Current	0	50	180	%	★
F9-34	Synchronous Motor Back EMF Identification Final Current	30	80	180	%	★
F9-35	Synchronous Motor Tuning	1	6	100	-	☆

删除[Mayday Mayday]: 900

	Current Loop Kp Adjustment Coefficient					
F9-36	Synchronous Motor Tuning Current Loop Ki Adjustment Coefficient	1	6	100	-	☆
F9-37-F9-70	Reserved					

5.2 Monitoring Parameter

The monitoring parameters of the inverter can only be read and cannot be modified.

Parameter	Description	Unit	Communication Address	Parameter Attribute
U0-00	Inverter Running State 1: forward 2: reverse 3: stop	-	1000H	▲
U0-01	Fault Code	-	1001H	▲
U0-02	Set Frequency	0.1Hz	1002H	▲
U0-03	Running Frequency	0.1Hz	1003H	▲
U0-04	Running Speed	Rpm	1004H	▲
U0-05	Output Voltage	V	1005H	▲
U0-06	Output Current	0.1A	1006H	▲
U0-07	Output Power	0.1KW	1007H	▲
U0-08	DC Bus Voltage	V	1008H	▲
U0-09	Output Torque	0.1Nm	1009H	▲
U0-10	Power Factor Angle	-	100AH	▲
U0-11	DI input state, default display ------. DI1-DI4 effective will display ---- ┤ ----├ --- ┤- ---├ -	-	100BH	▲
U0-12	Relay and DO output state, default display ------. Relay 1 effective will display ---- ┤	-	100CH	▲
U0-13	AI1 Voltage Before Correction	0.01V	100DH	▲
U0-14	AI2 Voltage Before Correction	0.01V	100EH	▲
U0-15	AI1 Voltage	0.01V	100FH	▲
U0-16	AI2 Voltage	0.01V	1010H	▲
U0-17	PID Setting	-	1011H	▲
U0-18	PID Feedback	-	1012H	▲
U0-19	Remaining Running Time	0.1Min	1013H	▲
U0-20	Current Power-on Time	Min	1014H	▲
U0-21	Current Running Time	0.1Min	1015H	▲
U0-22	Cumulative Running Time	Hour	1016H	▲
U0-23	Accumulated Power-on Time	Hour	1017H	▲

删除[Mayday Mayday]: 900

U0-24	Cumulative Power Consumption	Kwh	1018H	▲
U0-25	Motor Temperature Value	℃	1019H	▲
U0-26	IGBT Temperature Value	℃	101AH	▲
U0-27	Actual Switching Frequency	0.1KHz	101BH	▲
U0-28	M-axis Current Actual Value	0.1A	101CH	▲
U0-29	T-axis Current Actual Value	0.1A	101DH	▲
U0-30	Feedback Speed Actual Value	0.1Hz	101EH	▲
U0-31	Reserved	-	101FH	▲
U0-32	Cascading running status of water pumps	-	1020H	▲
U0-33	Water supply pump state	-	1021H	▲
U0-34	Master and slave output torque	-	1022H	▲
U0-35	On-line identification of back EMF	-	1023H	▲
U0-36	Timing pump switching remain time display	-	h	▲
U0-37	Reserved	-	1025H	▲
U0-38	Reserved	-	1026H	▲
U0-39	Reserved	-	1027H	▲
U0-40	Reserved	-	1028H	▲
U0-41	Reserved	-	1029H	▲
U0-42	Product Serial Number Lower 16 Digits	-	102AH	▲
U0-43	Product Serial Number Higher 16 Digits	-	102BH	▲
U0-44	Motor Boot Version	-	102CH	▲
U0-45	CPU Type	-	102DH	▲
U0-46	Power Board Hardware Version	-	102EH	▲
U0-47	Power Board Software Version	-	102FH	▲
U0-48	Control Board Software Version	-	1030H	▲
U0-49	Product Number	-	1031H	▲
U0-50	Manufacturer Code	-	1032H	▲
U0-51	Third (most recent) Fault Code	-	1033H	▲
U0-52	Second Fault Code	-	1034H	▲
U0-53	First Fault Code	-	1035H	▲
U0-54	Third Fault Frequency	0.1Hz	1036H	▲
U0-55	Third Fault Current	0.1A	1037H	▲
U0-56	Third Fault DC Bus Voltage	0.1V	1038H	▲
U0-57	Third Fault Heatsink Temperature	℃	1039H	▲
U0-58	Third Fault Time(from power-on time)	Min	103AH	▲
U0-59	Third Fault Time(from running time)	0.1Hour	103BH	▲
U0-60	Second Fault Frequency	0.1Hz	103CH	▲
U0-61	Second Fault Current	0.1A	103DH	▲
U0-62	Second Fault DC Bus Voltage	0.1V	103EH	▲
U0-63	Second Fault Heatsink Temperature	℃	103FH	▲
U0-64	Second Fault Time(from power-on time)	Min	1040H	▲
U0-65	Second Fault Time(from running time)	0.1Hour	1041H	▲
U0-66	First Fault Frequency	0.1Hz	1042H	▲
U0-67	First Fault Current	0.1A	1043H	▲

删除[Mayday Mayday]: 900

U0-68	First Fault DC Bus Voltage	0.1V	1044H	▲
U0-69	First Fault Heatsink Temperature	℃	1045H	▲
U0-70	First Fault Time(from power-on time)	Min	1046H	▲
U0-71	First Fault Time(from running time)	0.1Hour	1047H	▲

删除[Mayday Mayday]: 900

Chapter 6 Communication

6.1 Modbus-RTU Communication Protocol

The controller can read consecutive addresses at one time, with a maximum of 12 addresses, but it should be noted that it cannot exceed the last address, otherwise it will make an error. The read operation command is 0x03; The write command is 0x06, which does not support reading and writing of bytes or bits.

<table>
<tr><th>Operation</th><th>command frame</th></tr>
<tr><td rowspan="2">Read</td><td>Read command frame of master station
 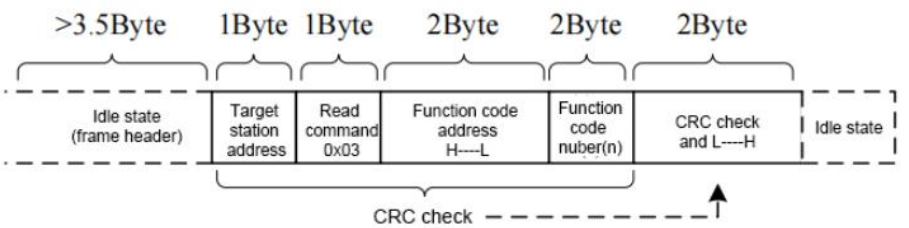
</td></tr>
<tr><td>Read response frame of slave station
 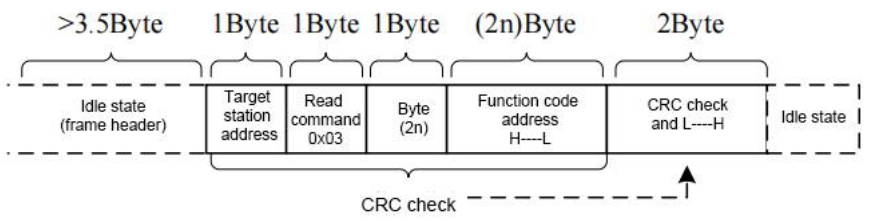
</td></tr>
<tr><td>Write</td><td>Write command framd of master station
 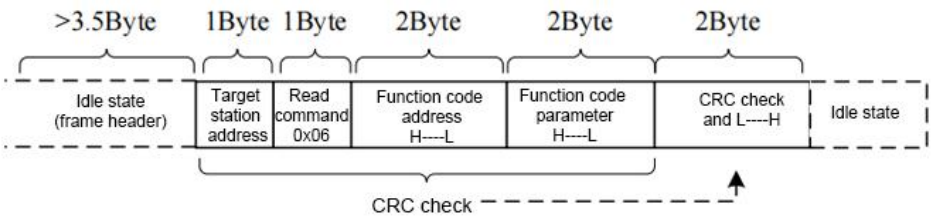

Write response framd of master station
 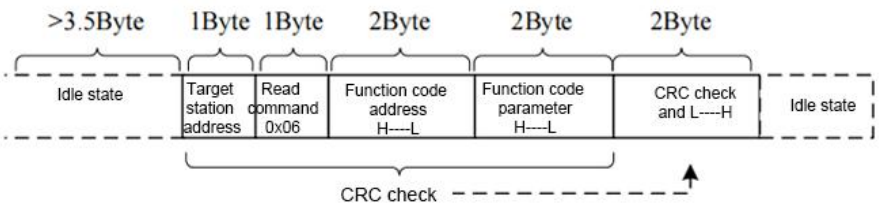
</td></tr>
<tr><td>Fault</td><td>Read response errot framd of slave station
 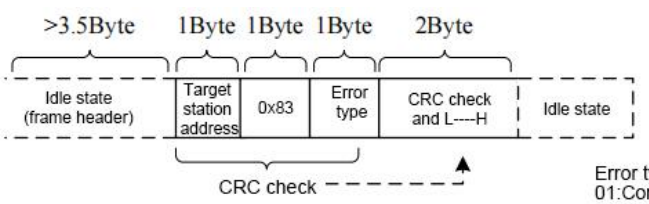

Error type:
01:Command code error
02: Address error
03: Data error
04: Command cannot handle
Read response errot framd of slave station
 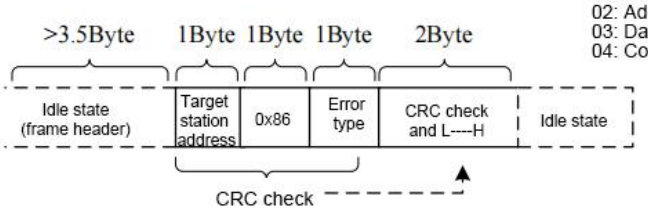
</td></tr>
</table>

删除[Mayday Mayday]: 900

6.2 Modbus Register Definition

Register Number	Function Code Parameter	Function Code	Function	Range	Description
0x01	-	06/03	Set communication frequency	-10000~10000	10000 refers to 100% corresponding to the maximum frequency, 0 refers to 0% corresponding to the minimum frequency, when set to negative direction.
0x02	-	06	Control command	1~7	1：forward running 2：reverse running 3：forward jogging 4：reverse jogging 5：free stop 6：ramp to stop 7：fault reset
0x03	-	06	Relay control	0x00~0x0F	BIT0：relay 1 control； BIT1：relay 2 control BIT2：DO1 control； BIT3：DO2 control
0x04	-	06	AO1 output control	0～7FFF	0 corresponding output 0%， 7FFF corresponding output 100%
0x05	-	06	AO2 output control	0～7FFF	0 corresponding output 0%， 7FFF corresponding output 100%
0x5000	-	06/03	Internal communication to read/modify inverter password	0~65535	Directly reading or modifying the value of parameter F6-03 when using the corresponding WeChat Mini Program.
0xF000	F0-00	03	Command source	0~2	Refer to F0-00
……					
0xF924	F9-36	03	Synchronous motor tuning time current loop Ki adjustment coefficient	Depend on inverter model	Refer to F9-36
0x1000	U0-00	03	Refer to U0-00		
……					
0x1047	U0-71	03	Refer to U0-71		

All user-configurable parameters can be read or written from the hold register by the appropriate Modbus command. The register numbers of parameters F0-00 to F9-40 are defined as 0xF001 to 0xF928. The register numbers of parameters U0-00 to U0-71 are defined as 0x1000 to 0x1047.

删除[Mayday Mayday]: 900

6.3 Modbus Application Cases

6.3.1 Setting Communication Parameters

During MODBUS communication, you need to set relevant parameters first, and they can be set in F7 parameter group.

Parameter	Name	Description
F7-00	Inverter address	The local address of the inverter when it uses the communication function. If the value is set to 0, the broadcast address is used to implement the broadcast function of the upper computer.
F7-01	Baud Rate	0：9600BPS 1：19200BPS 2：38400BPS 3：57600BPS 4：115200BPS
F7-02	Data Format	0: No verification (8-N-2) 1: even check (8-E-1) 2: Odd check (8-O-1) 3: No verification (8-N-1)
F7-03	Communication Timeout	When this parameter is set to 0.0 second, no communication timeout detection is performed. When this parameter is set to more than 0.1 second, if the interval between one communication and the next communication exceeds the communication timeout, the inverter will report a communication failure (Err16).

6.3.2 Enable Communication Function

Parameter	Set Value	Function
F0-00：Command Mode	2	The start-stop control mode of an inverter is set as communication control. The controller writes the number "1~5" to register no.2 to control the start-stop command executed by the inverter. See Section 6.2 for the specific command.
F0-01：Target Frequency Setting Mode	8	The target frequency setting mode of an inverter is communication setting. The controller can control the target frequency of an inverter by writing the number "-10000~10000" to register No. 1. For specific command, see Section 6.2.
F1-08：Relay Output Selection	7	The inverter relay is set for communication control, and the controller writes the number "0 or 1" into the No.3 register, which can control the closing and opening of the relay.
F1-28：AO1/AO2 Output Selection	6	The analog output terminal of the inverter is set as communication control, and the controller writes numbers "0~7FFF" to register no. 4, where 0 corresponds to 0% output and 7FFF to 100% output.
F5-00: PID Setting Source F5-02: PID Feedback Source	4/2	The Modbus register No.1 of the inverter is enabled at this time, and its value is used as the given value or feedback value of PID.

删除[Mayday Mayday]: 900

Chapter7 Maintenance and Troubleshooting

7.1 Routine Maintenance

7.1.1 Regular Inspection

设置格式[Lingqi Meng (Meng Lingqi)]: 行距: 2 倍行距

Due to the influence of environmental temperature, humidity, dust and vibration, the internal devices of the inverter will be aged, resulting in potential failures of the inverter or reducing the service life of the inverter. Therefore, it is necessary to carry out daily and regular maintenance of the inverter.

Daily Inspection Items	Regular Inspection Items
▲ Whether the sound of the motor changes abnormally or vibrates during running.	▲ Check whether the air channel is clean
▲ Does the installation environment of inverter change.	▲ Check whether the screws are loose.
▲ Whether the cooling fan of the inverter works normally and whether there are stains.	▲ Check whether the inverter is corroded.
▲ Is the inverter overheated.	▲ Check the wiring terminals for traces of arcing pulling.
▲ Is the inverter kept clean.	

7.1.2 Long-time Storage

设置格式[Lingqi Meng (Meng Lingqi)]: 行距: 2 倍行距

If the inverter has been stored for a period of time before installation or has not been powered by the main power supply for a long time, it is necessary to age and energize the DC capacitor in the inverter according to the following instructions before operation, and the inverter can run normally after the aging is completed.

Storage Time	Input Voltage 1	Duration 1	Input Voltage 2	Duration 2	Input Voltage 3	Duration 3	Input Voltage 4	Duration 4
Less than 1 year	100%	Without treatment						
1-2 years	100%	1 hour	Normal running					
2~3 years	25%	0.5 hour	50%	0.5 hour	75%	0.5 hour	100%	0.5 hour
More than 3 years	25%	2 hours	50%	2 hours	75%	2 hours	100%	2 hours

7.2 Faults and Solutions

If the inverter system fails during operation, the inverter will stop output immediately to protect the motor. At the same time, the inverter fault relay acts. The inverter panel displays fault codes. The following table lists the fault types and common solutions corresponding to the fault codes.

The list in the table is for reference only. Do not repair or modify it without authorization. If you can't troubleshoot, please ask the supplier for technical support.

删除[Mayday Mayday]: 900

Fault Name	Display	Possible Causes	Solutions
Inverter Unit Protection	Err01	1. The output circuit is grounded or short circuited 2. The connecting cable of the motor is too long 3. The module overheats 4. The internal connections become loose 5. The main control board is faulty 6. The drive board is faulty 7. The inverter module is faulty	1. Eliminate external faults 2. Install a reactor or an output filter 3. Check the air filter and the cooling fan 4. Connect all cables properly 5. Contact for technical support 6. Contact for technical support 7. Contact for technical support
Overcurrent During Acceleration	Err02	1. The output circuit is grounded or short circuited 2. The control method is vector and no parameter identification 3. The acceleration time is too short 4. Manual torque boost or V/F curve is not appropriate 5. The voltage is too low 6. The startup operation is performed on the rotating motor. 7. A sudden load is added during acceleration 8. The inverter model is of too small power class	1. Eliminate external faults 2. Perform the motor auto-tuning 3. Increase the acceleration time 4. Adjust the manual torque boost or V/F curve 5. Adjust the voltage to normal range 6. Select rotational speed tracking restart or start the motor after it stops 7. Remove the added load. 8. Select higher power rating inverter
Overcurrent During Deceleration	Err03	1. The output circuit is grounded or short circuited 2. The control method is vector and no parameter identification 3. The deceleration time is too short 4. The voltage is too low 5. A sudden load is added during deceleration 6. The braking unit and braking resistor are not installed	1. Eliminate external faults 2. Perform the motor auto-tuning 3. Increase the deceleration time 4. Adjust the voltage to normal range 5. Remove the added load. 6. Install the braking unit and braking resistor

删除[Mayday Mayday]: 900

Fault Name	Display	Possible Causes	Solutions
Overcurrent at Constant Speed	Err04	1. The output circuit is grounded or short circuited 2. The control method is vector and no parameter identification 3. The voltage is too low 4. A sudden load is added during deceleration 5. The inverter model is of too small power class	1. Eliminate external faults 2. Perform the motor auto-tuning 3. Adjust the voltage to normal range 4. Remove the added load. 5. Select higher power rating inverter
Overvoltage During Acceleration	Err05	1. The input voltage is too high 2. An external force drives the motor during acceleration 3. The acceleration time is too short 4. The braking unit and braking resistor are not installed	1. Adjust the voltage to normal range 2. Cancel the external force or install a braking resistor 3. Increase the acceleration time 4. Install the braking unit and braking resistor
Overvoltage During Deceleration	Err06	1. The input voltage is too high 2. An external force drives the motor during deceleration 3. The deceleration time is too short 4. The braking unit and braking resistor are not installed	1. Adjust the voltage to normal range 2. Cancel the external force or install a braking resistor 3. Increase the deceleration time 4. Install the braking unit and braking resistor
Overvoltage at Constant Speed	Err07	1. The input voltage is too high 2. An external force drives the motor during running	1. Adjust the voltage to normal range 2. Cancel the external force or install a braking resistor
Control Power Supply Fault	Err08	1. The input voltage is not within the allowable range	1. Adjust the voltage to normal range
Undervoltage	Err09	1. Instantaneous power failure 2. The inverter’s input voltage is not within the allowable range 3. The DC bus voltage is abnormal 4. The rectifier bridge and buffer resistor are faulty 5. The drive board is faulty 6. The main control board is faulty	1. Reset the fault 2. Adjust the voltage to normal range 3. Contact for Technical support 4. Contact for Technical support 5. Contact for Technical support 6. Contact for Technical support
Inverter Overload	Err10	1. The load is too heavy or locked rotor occurs on the motor 2. The inverter model is of too small power class	1. Reduce the load and check the motor and mechanical condition 2. Select an inverter of higher power class

删除[Mayday Mayday]: 900

Fault Name	Display	Possible Causes	Solutions
Motor Overload	Err11	1. P9-01 is set improperly 2. The load is too heavy or locked rotor occurs on the motor 3. The inverter model is of too small power class	1. Set P9-01 correctly 2. Reduce the load and check the motor and mechanical condition 3. Select higher power rating inverter
Power Input Phase Loss	Err12	1. The three-phase power input is abnormal 2. The drive board is faulty 3. The lightening board is faulty 4. The main control board is faulty	1. Eliminate external faults 2. Contact for Technical support 3. Contact for Technical support 4. Contact for Technical support
Power Output Phase Loss	Err13	1. The cable connecting the inverter and the motor is faulty 2. The inverter's three-phase outputs are unbalanced when the motor is running 3. The drive board is faulty 4. The module is faulty	1. Eliminate external faults 2. Check whether the motor three-phase winding is normal 3. Contact for Technical support 4. Contact for Technical support
Module Overheat	Err14	1. The ambient temperature is too high 2. The air filter is blocked 3. The fan is damaged 4. The thermally sensitive resistor of the module is damaged 5. The inverter module is damaged	1. Lower the ambient temperature 2. Clean the air filter 3. Replace the damaged fan 4. Replace the damaged thermally sensitive resistor 5. Replace the inverter module
External Equipment Fault	Err15	1. External fault signal is input via DI 2. External fault signal is input via virtual I/O	1. Reset the operation 2. Reset the operation
Communication Fault	Err16	1. The controller is in abnormal state 2. The communication cable is faulty 4. The communication parameters are set improperly	1. Check the cabling of host computer 2. Check the communication cabling 4. Set the communication parameters properly
Contactor Fault	Err17	1. The drive board and power supply are faulty 2. The contactors is faulty	1. Replace the faulty drive board or power supply board 2. Replace the faulty contactor
Current Detection Fault	Err18	1. The HALL device is faulty 2. The drive board is faulty	1. Replace the faulty HALL device 2. Replace the faulty drive board

删除[Mayday Mayday]: 900

Fault Name	Display	Possible Causes	Solutions
Motor Auto-tuning Fault	Err19	1. The motor parameters are not set according to the nameplate 2. The motor auto-tunning times out	1. Set the motor parameters according to the nameplate properly 2. Check the cable connecting the inverter and the motor
EEPROM Write Fault	Err21	1. The EEPROM chip is damaged	1. Replace the main control board
Inverter Hardware Fault	Err22	1、Overvoltage 2、Overcurrent	1. Solve as overvoltage fault 2. Solve as overcurrent fault
Short Circuit to Ground	Err23	1. The motor is short circuited to the ground	1. Replace the cable or motor
Accumulative Running Time Reached	Err26	1. The accumulative running time reaches the setting value	1. Clear the record through the parameter initialization function
Accumulative Power-on Time Reached	Err29	1. The accumulative power-on time reaches the setting value	1. Clear the record through the parameter initialization function
Pulse-by-pulse Current Limit Fault	Err40	1. The load is too heavy or locked rotor occurs on the motor 2. The inverter model is of too small power class	1. Reduce the load and check the motor and mechanical condition 2. Select an inverter of higher power class
Motor Switchover Fault During Running	Err41	1. Change the selection of the motor via terminal during running of the inverter	1. Perform motor switchover after the inverter stops
Excessive Speed Deviation Fault	Err42	1. Excessive Speed deviation Inspection parameter P6-10, P6-11 Setting is not correct 2. No parameter identification	1. Correctly Setting Parameter P6-10, P6-11. 2. Executive parameter identification
Water Shortage alarm	A52	1. Pressure sensor is damaged 2. Check whether the parameters of the inverter are incorrectly set 3. Whether the pipe network and motor are correct	1. Check pressure sensor 2. Check inverter parameter setting 3. Check motor and pipe
Overpressure Fault	Err53	1. Pressure sensor is damaged 2. Check whether the parameters of the inverter are incorrectly set	1. check the pressure sensor 2. Test whether the inverter F5-18 is correctly set

删除[Mayday Mayday]: 900

7.3 Common Faults and Solutions

The following faults may be encountered during the use of the inverter. Refer to the following table for simple fault analysis：

SN	Fault	Possible Causes	Solutions
1	There is no display at power-on	1. There is no power supply to the inverter or the power input to the inverter is too low 2. The power supply of the switch on the drive board of the inverter is faulty 3. The rectifier bridge is damaged 4. The buffer resistor is faulty 5. The control board or the operation panel is faulty 6. The cable connecting the control board and the drive board, and the operation panel breaks	1. Check the power supply 2. Check the DC bus voltage 3. Re-connect the 10-core cables 4~6. Contact us for technical support
2	”Err23” is displayed at power-on	1. The motor or the motor output cable is short circuited to the ground 2. The inverter is damaged	1. Measure the insulation of the motor and the output cable with a megger 2. Contact us for technical support
3	Err14 (Module overheat) fault alarm frequently	1. The setting of switching frequency is too high 2. The cooling fan is damaged, or the air filter is blocked 3. Components inside the inverter are damaged (thermocouple or other)	1. Reduce the switching frequency (P0-13) 2. Replace the fan and clean the air filter 3. Contact us for technical support
4	The motor does not rotate after the inverter runs	1. Check the motor and the motor cables 2. The inverter parameters are set improperly (Motor parameters) 3. The cable between the drive board and the control board is in poor contact 4. The drive board is faulty	1. Ensure the cable between the inverter and the motor is normal 2. Replace the motor or clear mechanical faults 3. Check the re-set motor parameters 4. Contact us for technical support
5	The DI terminals are disabled	1. The parameters are set incorrectly 2. The external signal is incorrect 3. The control board is faulty	1. Check and reset the parameters in group P4 2. Re-connect the external signal cables 3. Contact us for technical support

删除[Mayday Mayday]: 900

SN	Fault	Possible Causes	Solutions
6	The inverter overcurrent and overvoltage frequently	1. The motor parameters are set improperly 2. The acceleration/deceleration time is improper 3. The load fluctuates	1. Re-set motor parameters or re-perform the motor auto-tunning 2. Set proper acceleration/deceleration time 3. Contact us for technical support
7	Err17 alarm when power-on or running	The soft startup contactor is not picked up	1. Check whether the contactor cable is loose 2. Check whether the contactor is faulty 3. Check whether 24V power supply of the contactor is faulty 4. Contact us for technical support

7.4 Warranty Agreement

（1） Free warranty only refers to the inverter itself.

（2） In case of failure or damage within the warranty terms, our company is responsible for 12 months warranty (from the date of delivery, the bar code on the fuselage shall prevail, and if there is a contract agreement, it shall be implemented according to the agreement). For more than 12 months, we will charge a reasonable maintenance fee;

（3） During the warranty period, our company will charge a certain maintenance fee if:

a) Machine damage caused by the user's failure to comply with the regulations in the user manual;

b) Machine damage caused by mistakes in use and unauthorized maintenance and modification;

c) Damage caused by fire, flood, abnormal voltage, etc.;

d) Damage caused by using the inverter for abnormal functions;

e) Damage caused by man-made falling and transportation after purchase;

f) Failure and damage caused by obstacles outside the machine (such as external equipment factors);

（4） The service fee is calculated according to the uniform standard of the manufacturer. If there is a contract, the contract will take precedence.

（5） If there is any problem in the service process, please contact the supplier in time.

（6） The final interpretation right of warranty instructions belongs to our company.

Warranty Card

Customer Information	Address:	
	Name:	Contact:
	Postal code:	Tel:
Product Information	Product model:	
	Fuselage Bar code (posted here):	
	Agent name:	
Fault Information		

Certificate

This product has gone through rigorous quality control tests at factory.

Inspector	
Approval Mark	

删除[Mayday Mayday]: 900